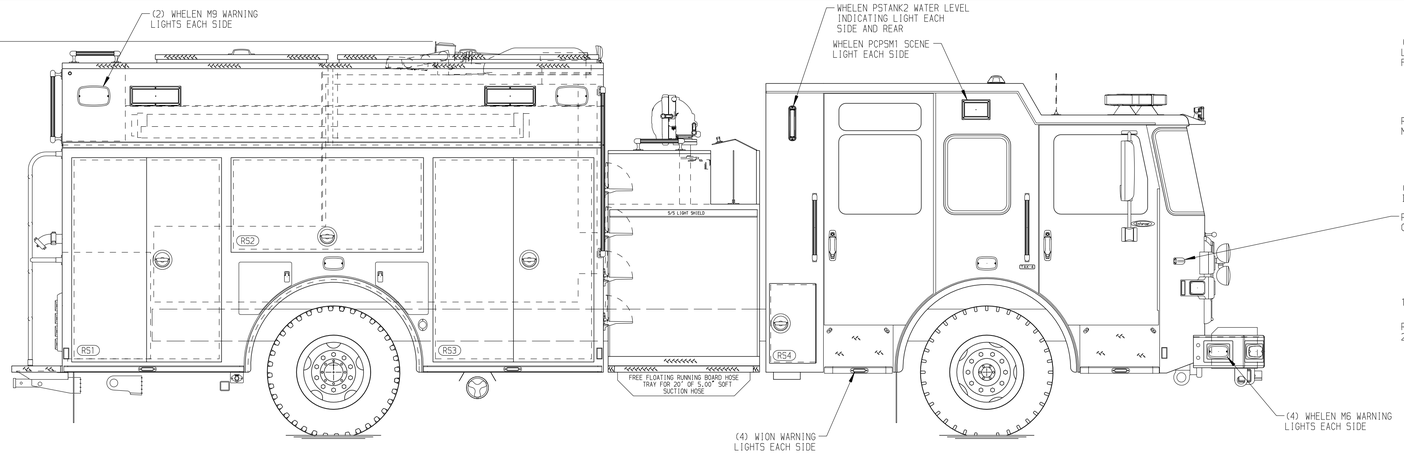

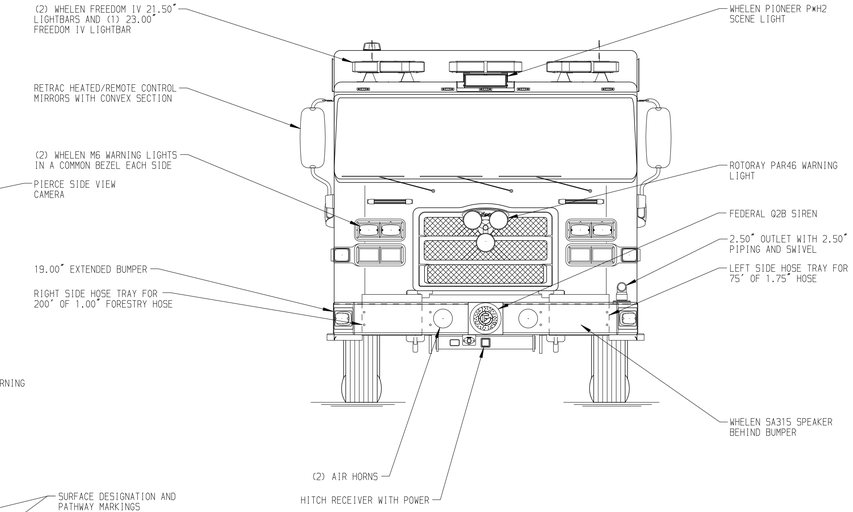

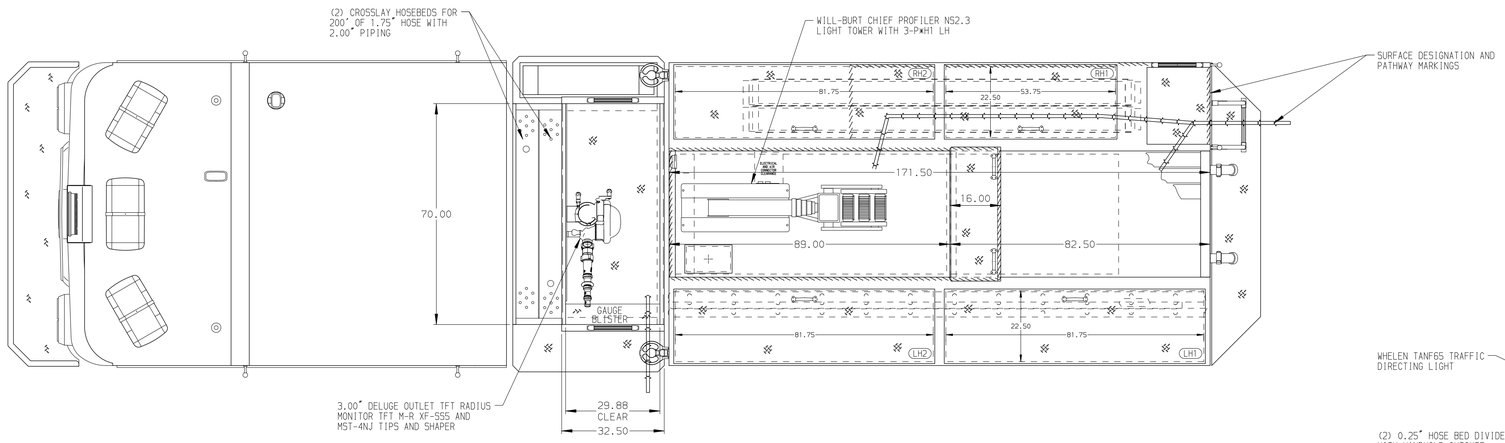

HOSEBED CAPACITIES

1. 200' OF 2.50" D.J. POLY HOSE
2. 1000' OF 5.00" D.J. POLY HOSE
3. 400' OF 3.00" D.J. POLY HOSE

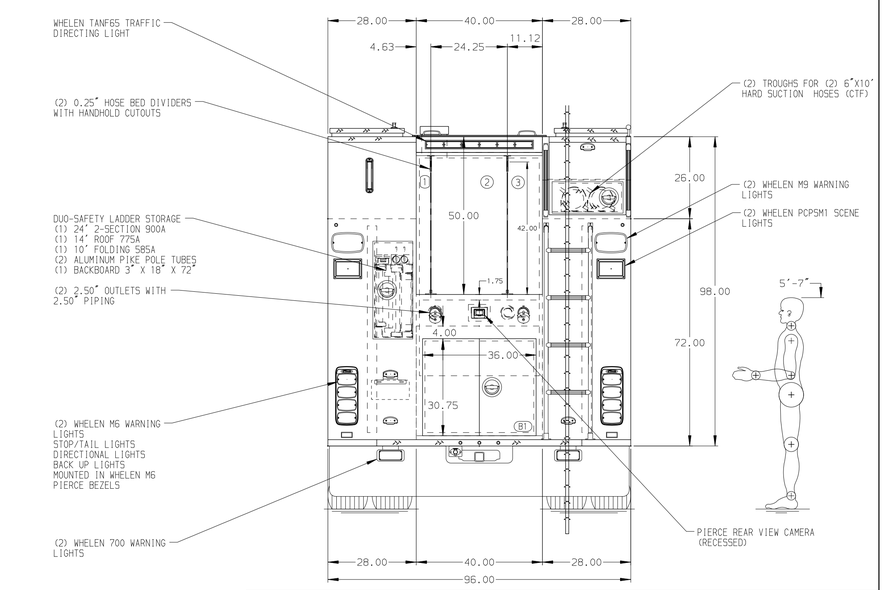

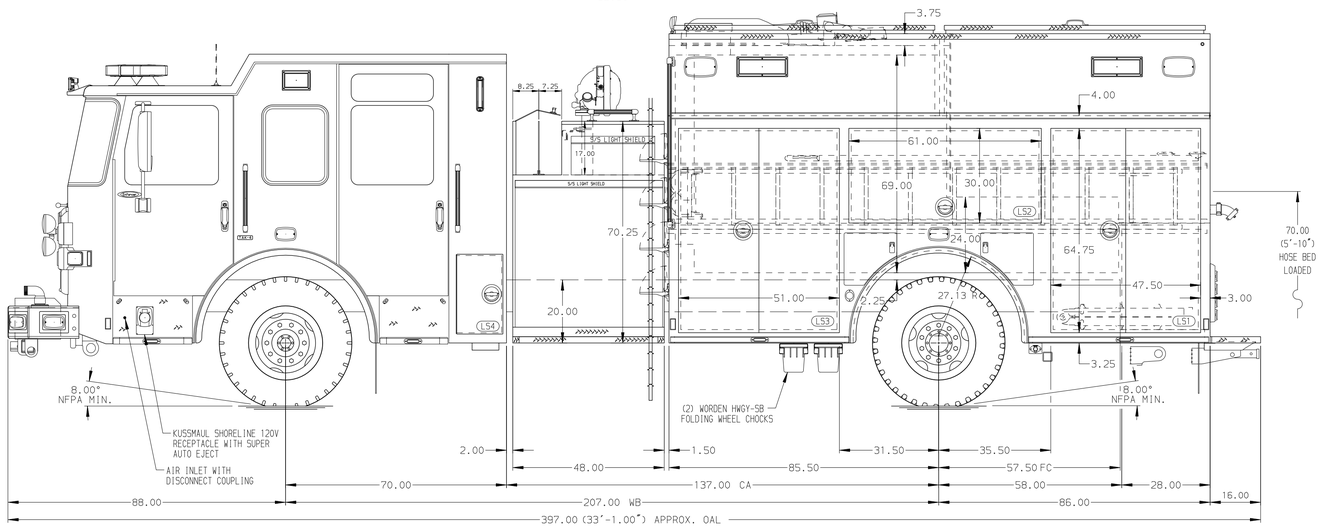

ALUMINUM BODY

NOTE

DIMENSIONS SHOWN ARE APPROXIMATE AND ARE SUBJECT TO MINOR DEVIATIONS AS MAY OCCUR OR BE NECESSARY IN CONSTRUCTION.
MINOR DETAILS NOT SHOWN.

REV	DATE	BY	CH
7	06MAY25	JWR	CSH
6	10APR25	BST	CSH
5	13FEB25	CDU	CDU

CHASSIS DATA
MAKE: PIERCE
MODEL: ENFORCER

Pierce MANUFACTURING INC.

TITLE: 1500GPM,1000G TANK 171" PUMPER,MUX
FOR: CITY OF RADFORD RADFORD,VIRGINIA
DWG NO.: 39604AD

JOB NO.	39604
SCALE	1:24
DATE	
DRAWN BY	JWR 14JAN25
CHECKED BY	CDU 05FEB25
SHEET SIZE	D
SHEET NO.	1 OF 1

View File Created 07-MAY-2025 13:37:08