PUMPER

BODY
Long Stainless Steel 2nd Gen Pumper

CHASSIS
Enforcer Chassis

CHASSIS

AXLE, FRONT, CUSTOM
20,000 lb Dana Axle

AXLE, REAR
27,000 lb Dana Axle

ENGINE
450 HP Cummins L9

TRANSMISSION
Allison 6th Gen, 3000 EVS P

BUMPER
19" Extended Steel Painted

CAB
6010 Enforcer Cab

BODY

WATER TANK
1000 Gallon Water Tank

COMPT, PUMPER, REAR
37.75" FF Lap, 31.88" Deep Rear Compt

COMPT, PUMPER, DRIVER SIDE
161" Lap Full Height Front & Rear FDLER

COMPT, PUMPER PASS. SIDE
161" Lap 3/4 Height, Broom, FDLER

FIRE SUPPRESSION

PUMPHOUSE
48" Control Zone Side Mount

PUMP
1500 GPM Waterous CSU

CROSSLAYS, 1.50"
(2) 1.50" Standard Capacity

CROSSLAYS, 2.50"
(1) 2.50" Standard Capacity

SPEEDLAYS
Speedlays Not Required

GENERATOR
Generator Not Required

Foam System
Not Required

Foam Cell
Not Required

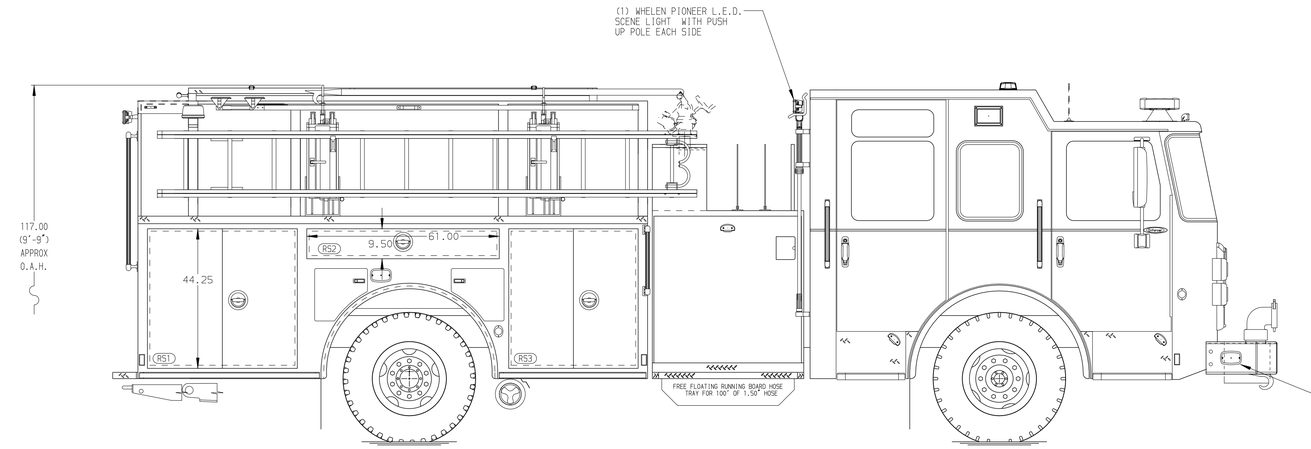

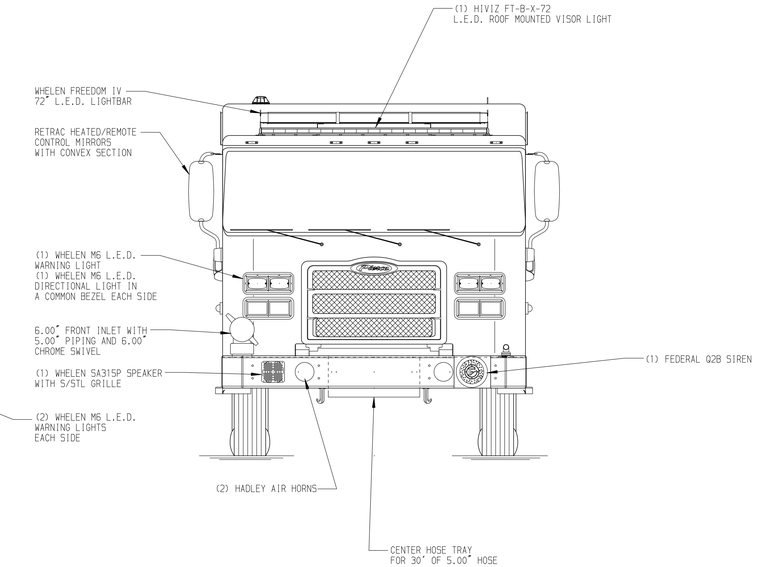

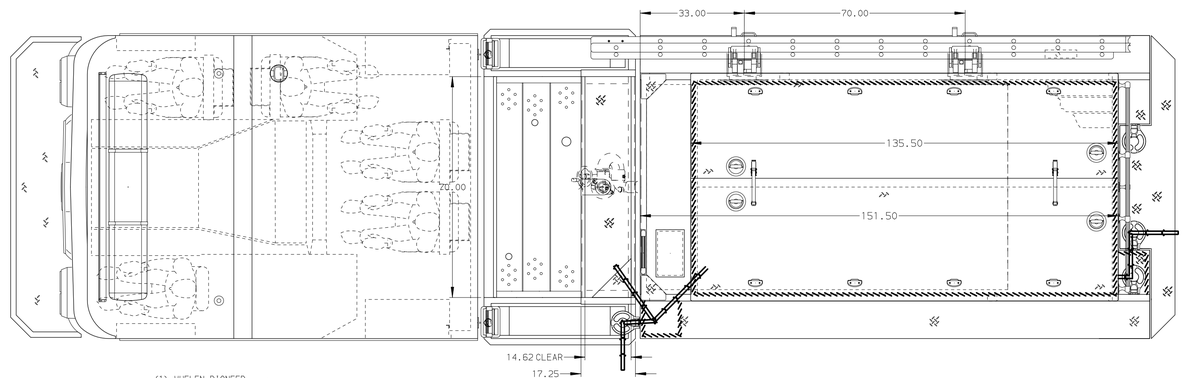

HOSEBED CAPACITY
BED 1
200' OF 2.50" D.J. POLY HOSE
BED 2
1950' OF 4.00" D.J. POLY HOSE
BED 3
200' OF 2.00" D.J. POLY HOSE

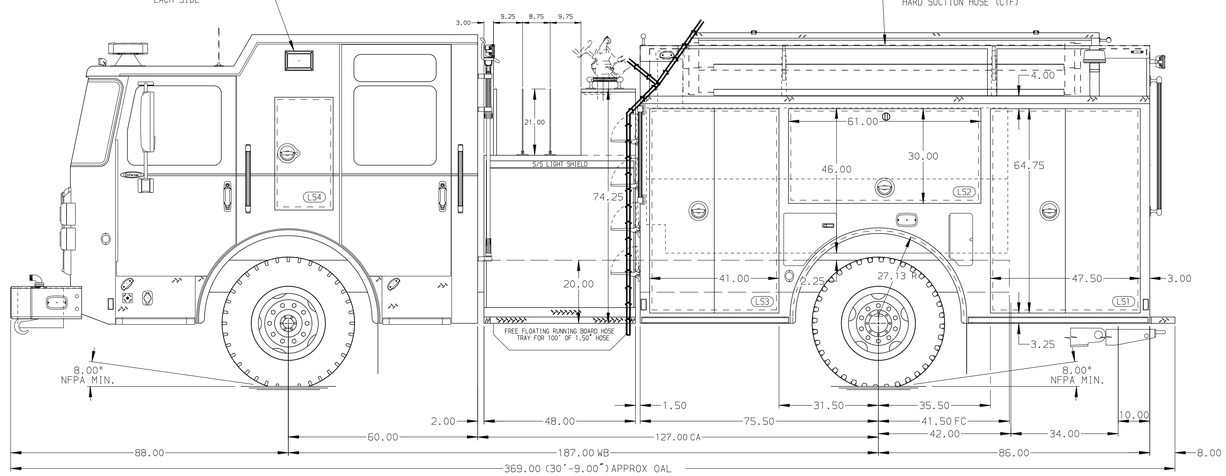

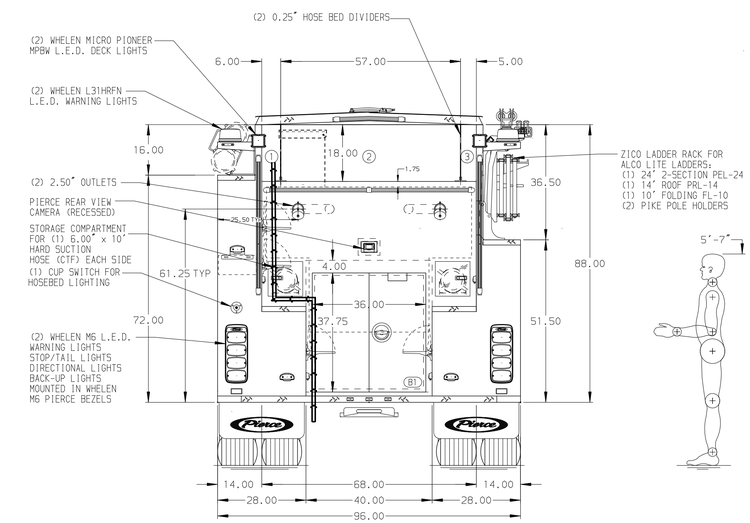

MAXIMUM O.A.L. 372.00"

MAXIMUM O.A.H. 117.00"

NOTE

DIMENSIONS SHOWN ARE APPROXIMATE AND ARE SUBJECT TO MINOR DEVIATIONS AS MAY OCCUR OR BE NECESSARY IN CONSTRUCTION.
MINOR DETAILS NOT SHOWN.

1. ONE 1.50 OUTLET WITH 2.00 PIPING AND SWIVEL LOCATED ON TOP OF THE LEFT SIDE OF THE BUMPER
2. SHORELINE RECEPTACLE WITH KUSSMAUL SUPER AUTO-EJECT LOCATED IN DRIVER'S STEP AREA
3. AIR INLET WITH DISCONNECT COUPLING AND RECESSED BOX IN THE DRIVER SIDE STEPWELL
4. BATTERY CHARGER LOCATED IN COMPARTMENT PER SHOP ORDER
5. BATTERY CHARGE INDICATOR LOCATED ON THE DRIVER SIDE SEAT RISER
6. FIVE ADJUSTABLE SHELVES LOCATED SHOP ORDER
7. TWO FLOOR MOUNTED SLIDE-OUT TRAYS LOCATED PER SHOP ORDER
8. PAC TRAC LOCATED PER SHOP ORDER
9. ONE 120V 6-PLACE RECEPTACLE STRIP LOCATED PER SHOP ORDER

REV	DATE	BY	CH
7	26FEB25	LST	JLL
6	23JAN25	LST	JLL

CHASSIS DATA
MAKE: PIERCE
MODEL: ENFORCER

Pierce MANUFACTURING INC.

TITLE: Pierce Pumper Approval Drawing
FOR: Barre Fire Department
DWG NO.: 39610AD

JOB NO.	39610
SCALE	1:24
DATE	11NOV24
DRAWN BY	LST
CHECKED BY	MMF
SHEET SIZE	D
SHEET NO.	1 OF 1

View File Created 27-FEB-2025 09:41:33