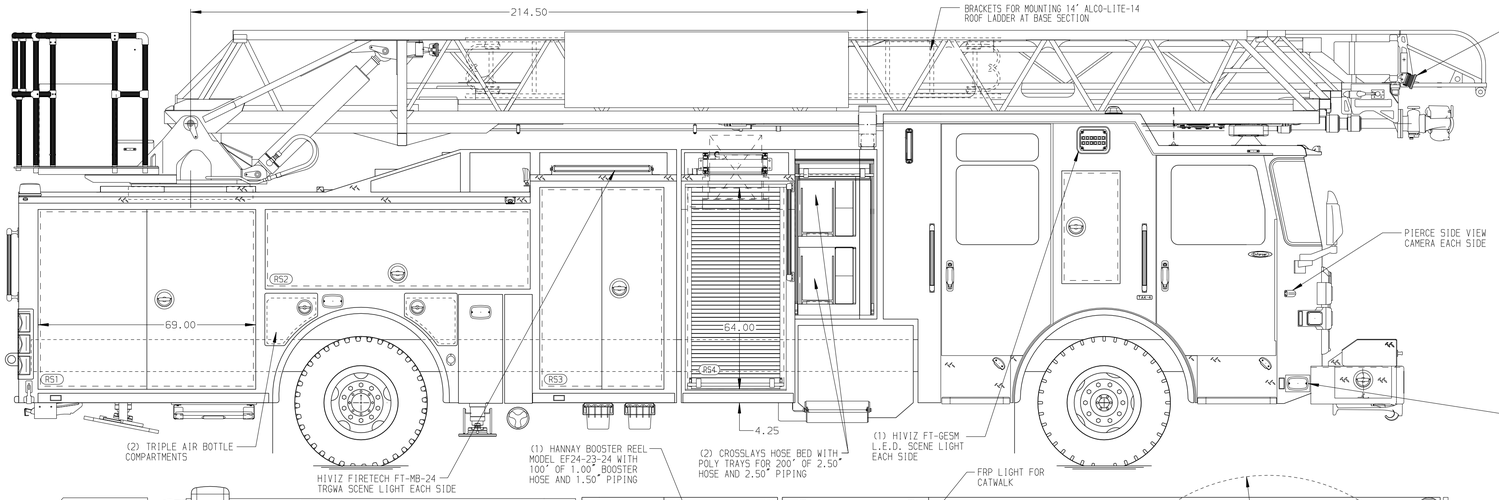

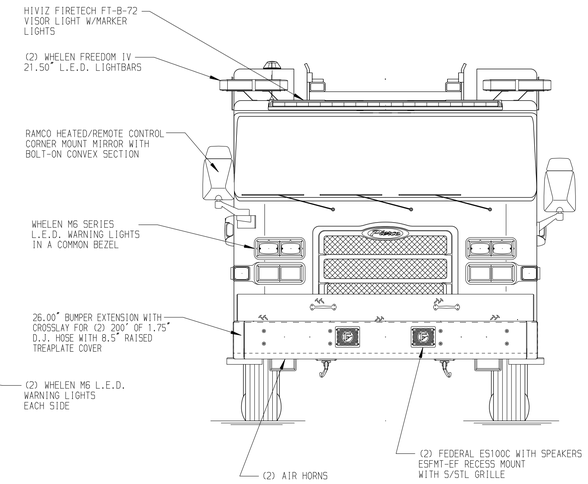

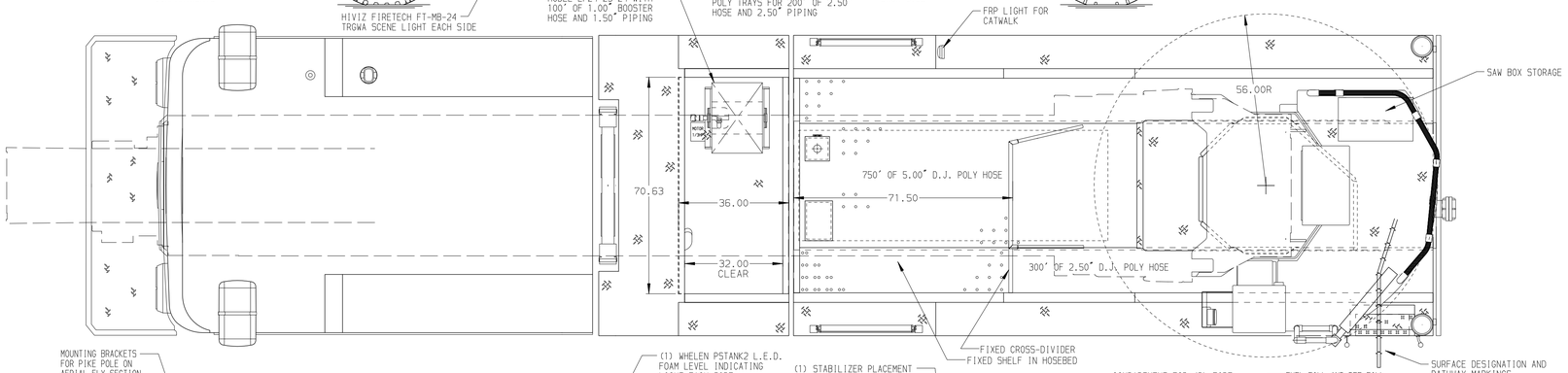

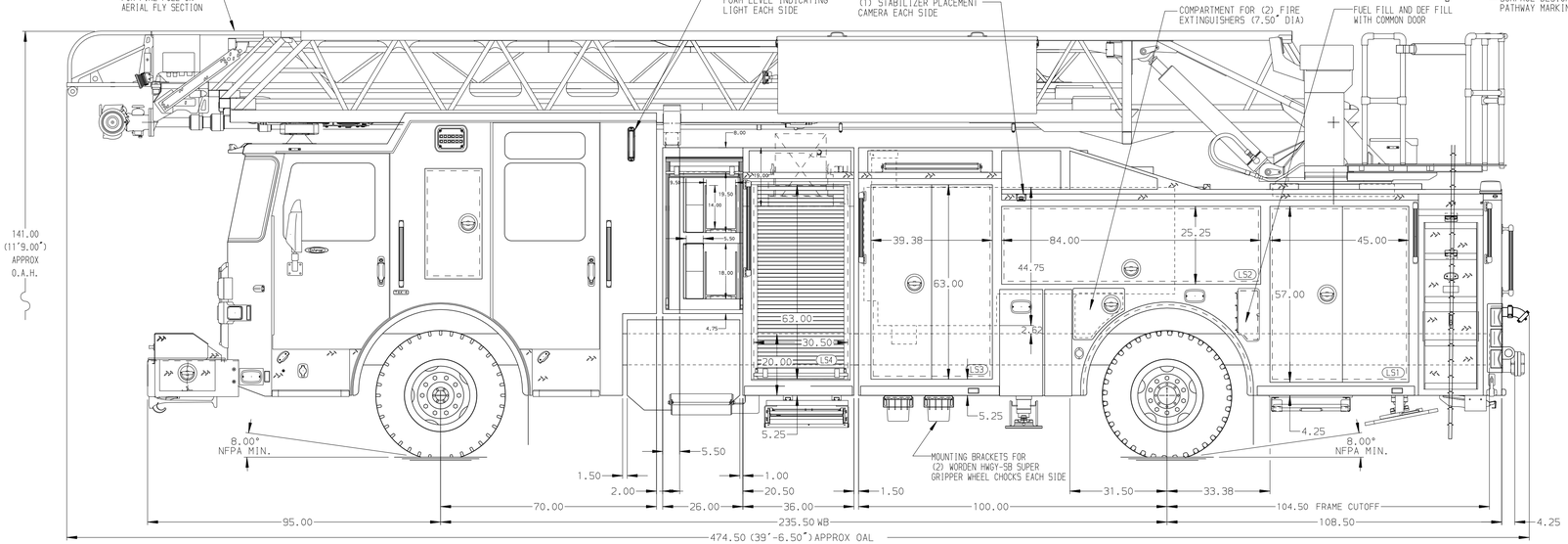

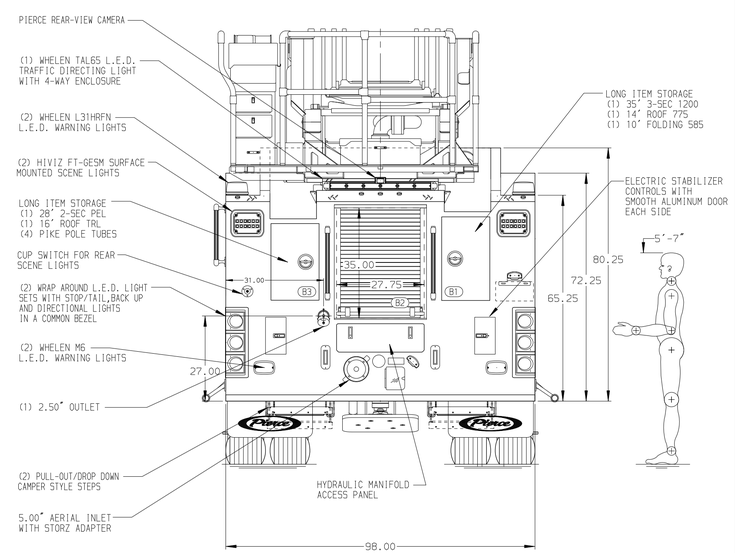

ALUMINUM BODY

SIDE ROLL AND FRONTAL IMPACT PROTECTION

MAX O.A.H. 11'-9.00"

NOTE

DIMENSIONS SHOWN ARE APPROXIMATE AND ARE SUBJECT TO MINOR DEVIATIONS AS MAY OCCUR OR BE NECESSARY IN CONSTRUCTION.
MINOR DETAILS NOT SHOWN.

1. NO LIMITED RETRACTION REQUIRED
2. TWO 1.50 OUTLETS WITH 2.00 PIPING AND SWIVEL LOCATED IN BUMPER
3. SHORELINE RECEPTACLE WITH KUSSMAUL SUPER AUTO-EJECT LOCATED ON CAB CORNER
4. AIR INLET WITH DISCONNECT COUPLING IN THE DRIVER SIDE STEPWELL
5. BATTERY CHARGER LOCATED PER ORDER
6. BATTERY CHARGE INDICATOR LOCATED PER ORDER
7. NINE ADJUSTABLE SHELVES LOCATED PER ORDER
8. TWO FLOOR MOUNTED SLIDE-OUT TRAYS LOCATED PER ORDER
9. NON-RAISED AERIAL PEDESTAL
10. LIFTING EYE ROPE RESCUE ATTACHMENT AT AERIAL TIP
11. 1500 GPM HIGH FLOW WATERWAY
12. ONE CTECH (3) DRAWER ASSEMBLY PER ORDER
13. PEGBOARD ON BACK WALL OF COMPARTMENT PER ORDER
14. TWO VERTICAL PARTITIONS PER ORDER
15. FOAM PRO 2002 SYSTEM
16. FIVE 120V RECEPTACLES PER ORDER
17. RUNG LIGHTING ON AERIAL LADDER
18. TWO SLIDE-OUT TOOLBOARDS PER ORDER
19. XANTREX FREEDOM X INVERTER PER ORDER

REV	DATE	BY	CH
3	03APR25	LWE	JGO
2	13FEB25	LWE	JGO
1	20DEC24	LWE	NAK

CHASSIS DATA
MAKE: PIERCE
MODEL: ENFORCER

Pierce MANUFACTURING INC.

TITLE: 107' ASCENDANT AERIAL LADDER AND BODY ASSEMBLY
500 GALLON TANK, 470 WATER/ 30 FOAM

FOR: FORT THOMAS
FORT THOMAS, KY

DWG NO. 39616AD

JOB NO.	39616
SCALE	1:24
DATE	
DRAWN BY	LWE
	06DEC224
CHECKED BY	NAK
	17DEC24
SHEET SIZE	D
SHEET NO.	1 OF 1

View File Created 04-APR-2025 14:55:22