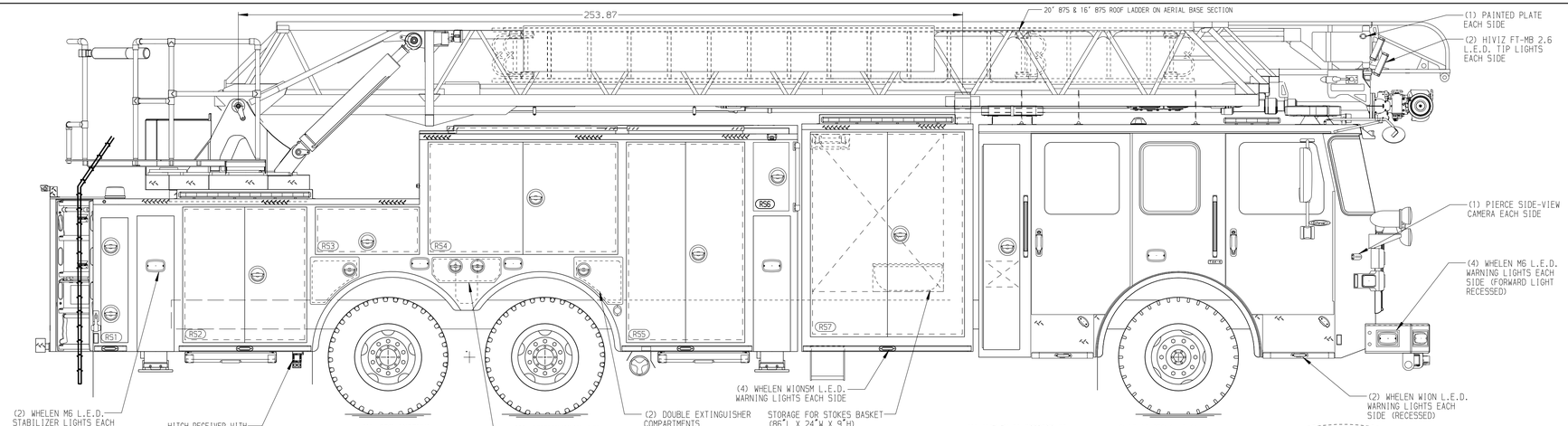

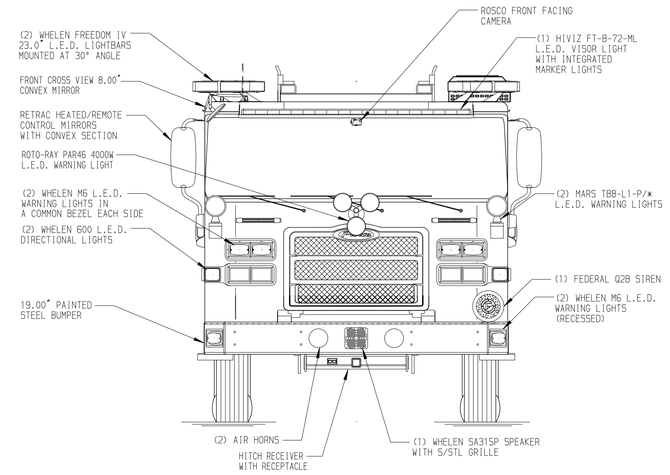

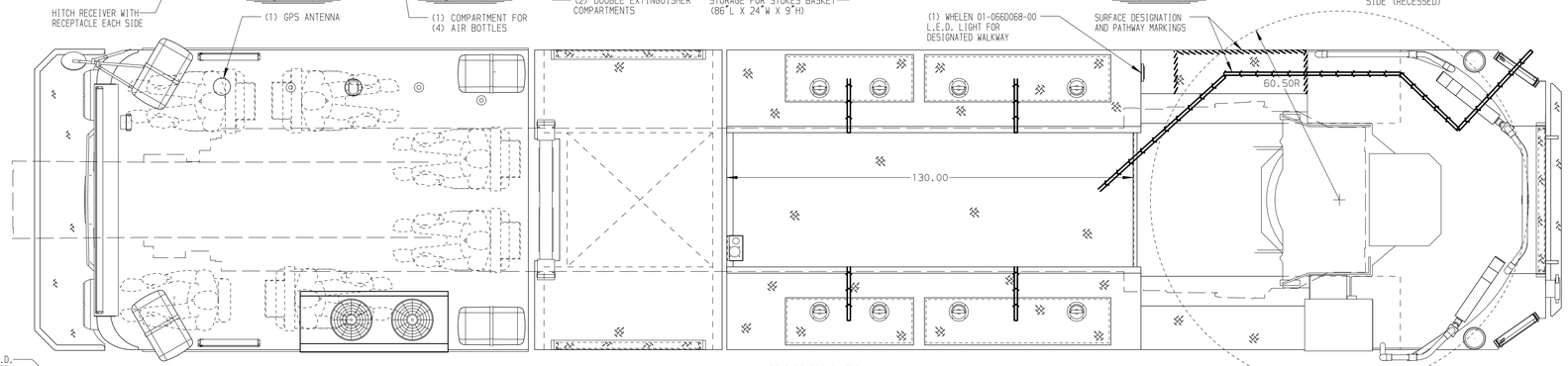

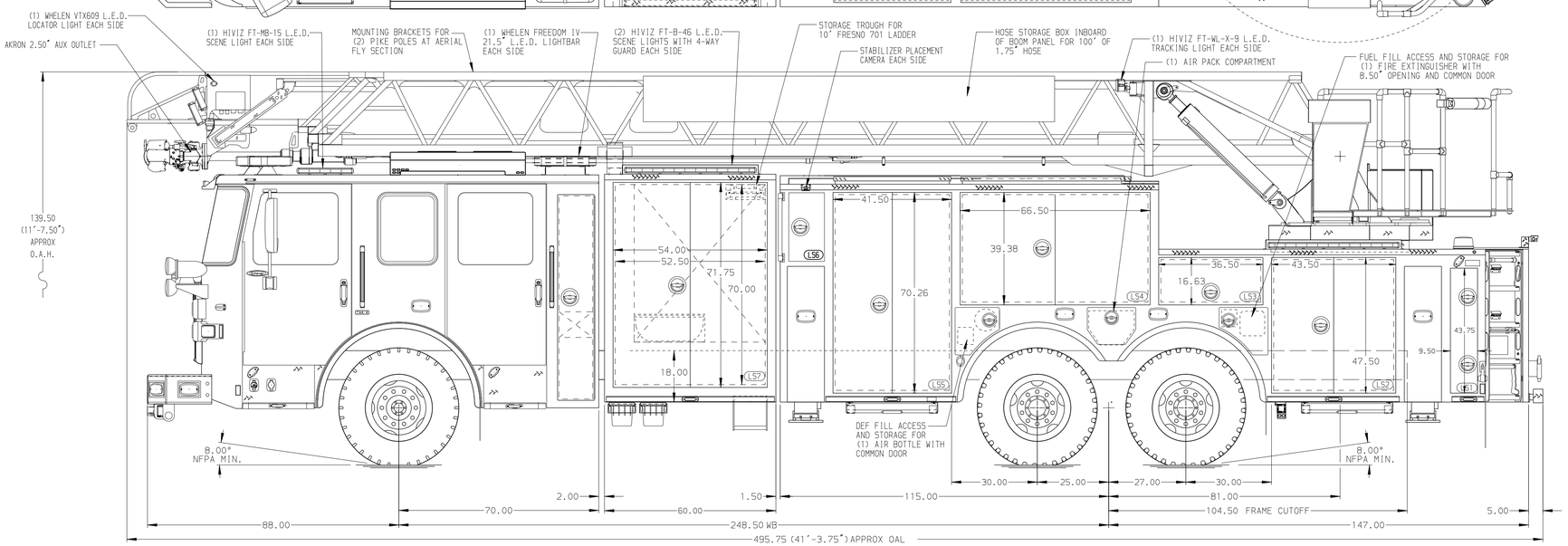

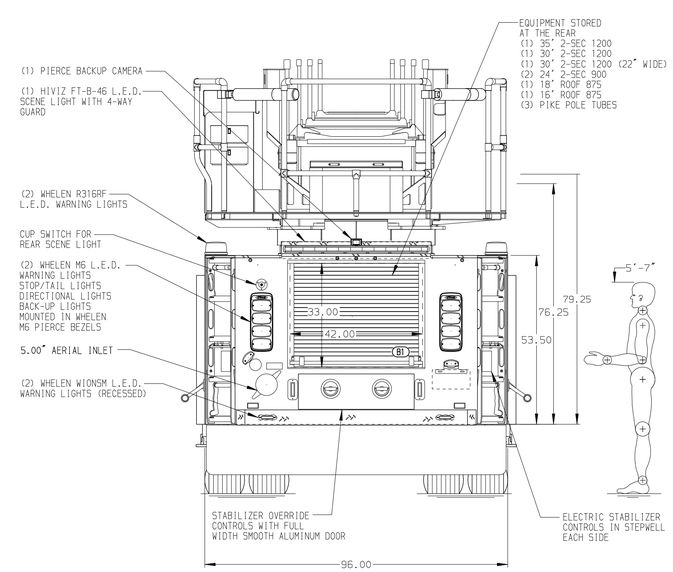

ALUMINUM BODY

MAX O.A.H. = 11'-7.5" (139.50")

NOTE

DIMENSIONS SHOWN ARE APPROXIMATE AND ARE SUBJECT TO MINOR DEVIATIONS AS MAY OCCUR OR BE NECESSARY IN CONSTRUCTION.
MINOR DETAILS NOT SHOWN.

1. 14.00" LIMITED RETRACTION REQUIRED
2. ONE 1.50 OUTLET WITH 2.00 PIPING AND SWIVEL LOCATED IN CENTER BUMPER TRAY
3. SHORELINE RECEPTACLE WITH KUSSMAUL SUPER AUTO-EJECT LOCATED IN DRIVER SIDE STEPWELL
4. RECESSED AIR INLET WITH KUSSMAUL AIR EJECT & WEATHERPROOF COVER IN THE DRIVER SIDE STEPWELL
5. BATTERY CHARGER/COMPRESSOR LOCATED PER ORDER
6. BATTERY CHARGE INDICATOR LOCATED ON DRIVER'S SEAT RISER
7. FOUR TILT/SLIDE-OUT TRAYS LOCATED IN COMPARTMENTS PER ORDER
8. FOUR FLOOR MOUNTED SLIDE-OUT TRAYS LOCATED IN COMPARTMENTS PER ORDER
9. THREE TOOLBOARDS ADDED TO SLIDE-OUT TRAYS LOCATED PER ORDER
10. ONE SPECIAL SIZE VERTICAL PARTITION LOCATED IN COMPARTMENT PER ORDER
11. SIX RECEPTACLES LOCATED PER ORDER
12. ONE FALSE FLOOR LOCATED IN COMPARTMENT PER ORDER
13. TWO FLOOR EXTENSIONS LOCATED IN COMPARTMENTS PER ORDER
14. TWO HIVIZ FT-WL-3500 STABILIZER SCENE LIGHTS
15. 1500 GPM HIGH FLOW WATERWAY
16. 3.00" RAISED AERIAL PEDESTAL
17. LIFTING EYE ROPE RESCUE ATTACHMENT AT AERIAL TIP
18. TECNIQ 4-SECTION RUNG LIGHTING AT AERIAL DEVICE
19. DC POWER TO AERIAL TIP
20. ONE LITTLE GIANT VELOCITY MODEL 17, 15417-001 LOCATED IN LS7 PER ORDER
21. OPTICOM EMITTER LOCATED AT AERIAL DEVICE

REV	DATE	BY	CH	
E	05JUN25	ANZ	COS	CHASSIS DATA
D	01MAY25	ANZ	COS	
C	14APR25	ANZ	COS	MAKE
B	17MAR25	ANZ	COS	PIERCE
A	13MAR25	ANZ	COS	MODEL
				ENFORCER

Pierce MANUFACTURING INC.

TITLE	107' ASCENDANT AERIAL LADDER AND BODY ASSEMBLY NO PUMP, NO TANK
FOR	FALLS TOWNSHIP MORRISVILLE, PA
DWG NO.	39629AD

JOB NO.	39629
SCALE	1:24
DATE	
DRAWN BY	ANZ
DATE	04JAN25
CHECKED BY	BYO
DATE	17JAN25
SHEET SIZE	D
SHEET NO.	1 OF 1

View File Created 05-JUN-2025 09:15:58