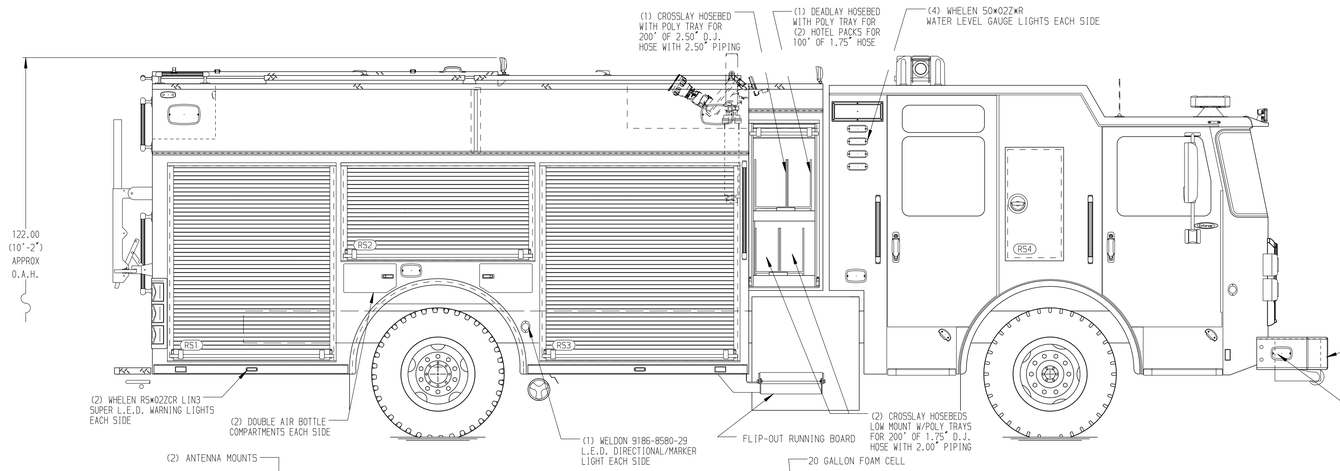

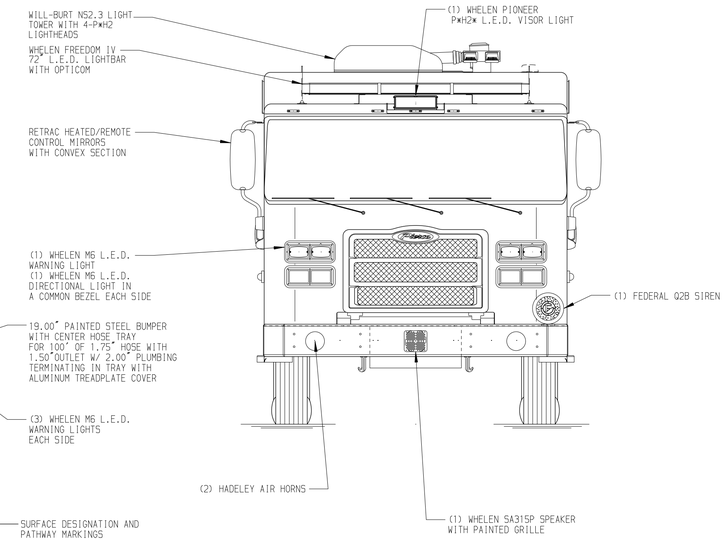

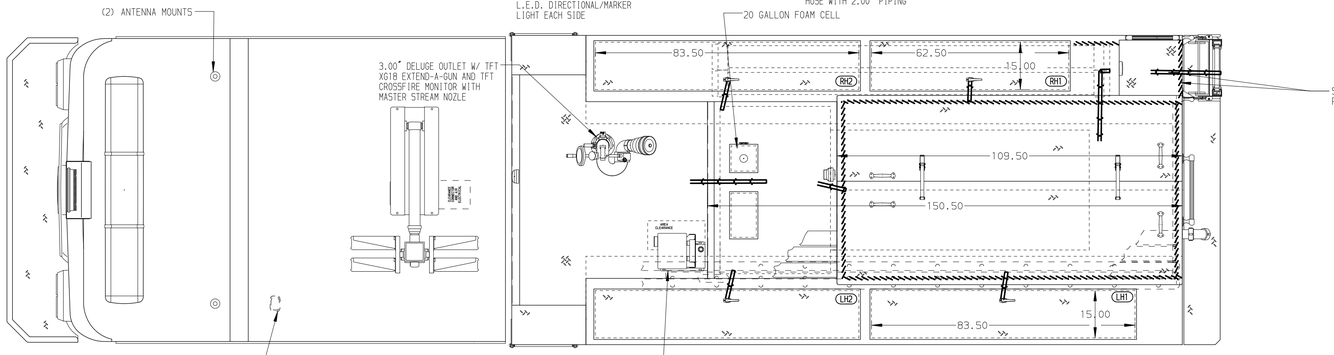

HOSEBED CAPACITIES

1. 800' OF 5.00" D.J. POLY HOSE
2. 400' OF 2.50" D.J. POLY HOSE
3. (3) 100' OF 1.75" HOTEL PACKS OF D.J. POLY HOSE

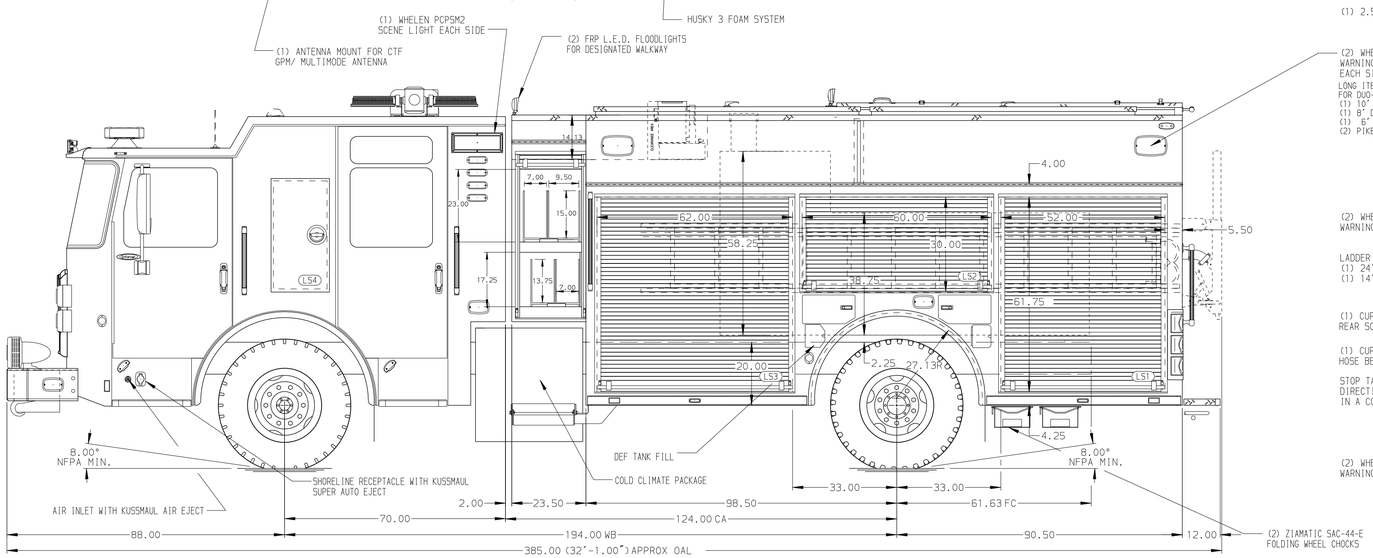

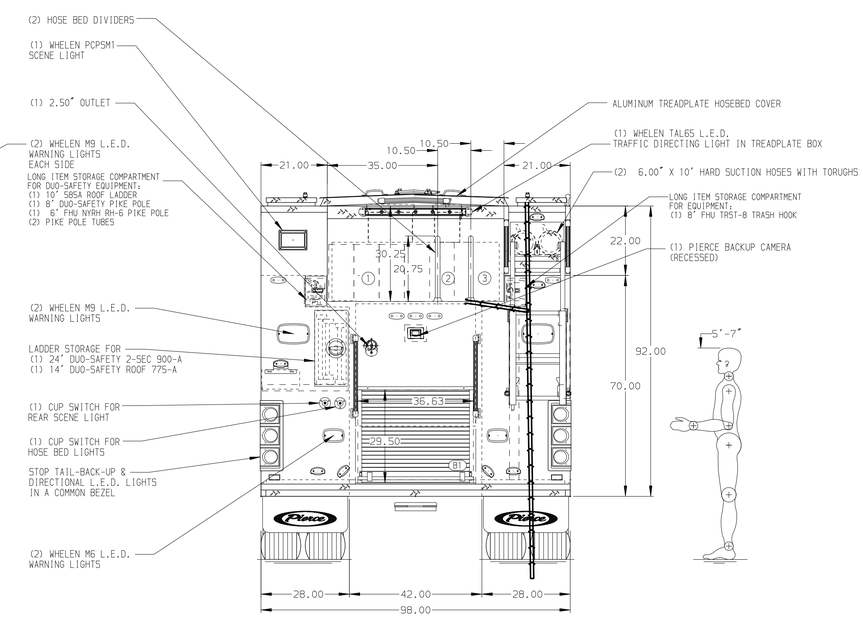

ALUMINUM BODY

NOTE

DIMENSIONS SHOWN ARE APPROXIMATE AND ARE SUBJECT TO MINOR DEVIATIONS AS MAY OCCUR OR BE NECESSARY IN CONSTRUCTION.
MINOR DETAILS NOT SHOWN.

1. ONE ADDITIONAL POLY TRAY SHIPPED LOOSE
2. BATTERY CHARGER INDICATOR LOCATED ON THE DRIVER'S SEAT RISER
3. BATTERY CHARGER LOCATED BEHIND THE DRIVER'S SEAT

REV	DATE	BY	CH
V	11MAR25	LST	GKH

CHASSIS DATA — MAKE: PIERCE — MODEL: ENFORCER

Pierce MANUFACTURING INC.

TITLE: 1500 GPM, 750 G TANK, 730 G WATER, 20 G FOAM CELL 189" PUC BODY, HARD WIRED

FOR: KETCHUM FIRE DEPARTMENT KETCHUM, IDAHO

DWG NO.: 39642AD

JOB NO.	39642
SCALE	1:24
DATE	
DRAWN BY	LST 25OCT24
CHECKED BY	SJS 28OCT24
SHEET SIZE	D
SHEET NO.	1 OF 1

View File Created 14-MAR-2025 13:44:11