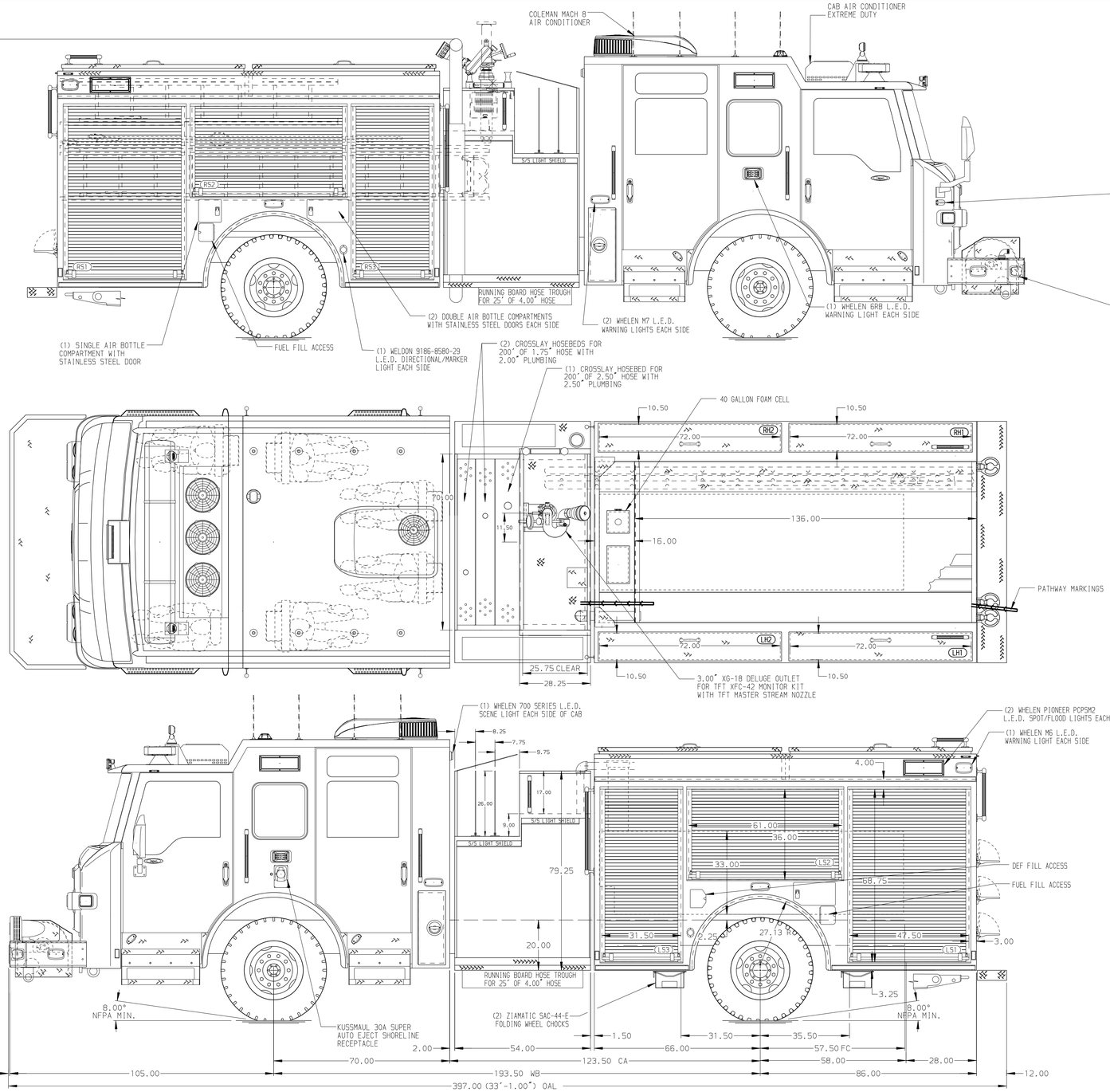

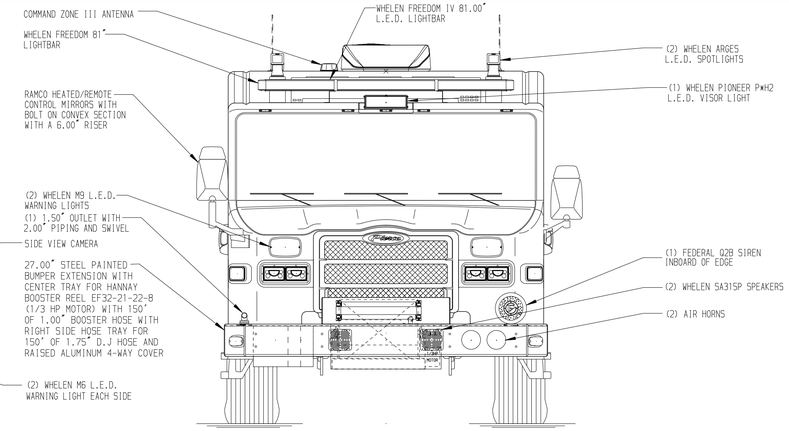

HOSEBED CAPACITIES

1. 200' OF 2.50" D.J. POLYESTER HOSE
2. 1000' OF 4.00" D.J. POLYESTER HOSE
3. 200' OF 2.50" D.J. POLYESTER HOSE

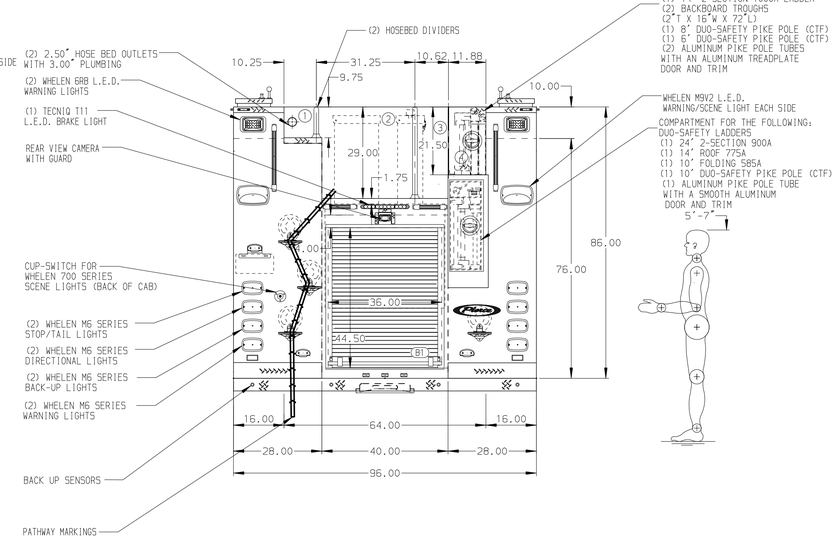

ALUMINUM BODY

SIDE ROLL AND FRONTAL IMPACT PROTECTION

Pierce MANUFACTURING INC.

JOB NO.	39643 01-11
SCALE	1:24
DATE	
TITLE	1500 GPM, 540G TANK, 500G WATER, 40G FOAM 152" 2G PUMPER, MUX
FOR	PHOENIX FIRE DEPARTMENT PHOENIX, ARIZONA
DRAWN BY	JAM 05FEB25
CHECKED BY	BSE 07FEB25
SHEET SIZE	D
SHEET NO.	1 OF 2
DWG NO.	39643AD-SH1

NOTE

DIMENSIONS SHOWN ARE APPROXIMATE AND ARE SUBJECT TO MINOR DEVIATIONS AS MAY OCCUR OR BE NECESSARY IN CONSTRUCTION.
MINOR DETAILS NOT SHOWN.

1. AIR INLET/OUTLET WITH DISCONNECT FITTING LOCATED ON DRIVER'S SIDE PUMP PANEL
2. BATTERY CHARGER LOCATED IN FRONT RS HATCH
3. SUB FEED BREAKER BOX LOCATED IN LS3

REV	DATE	BY	CH
7	16SEP25	JAM	BSE
6	26AUG25	JAM	BSE
5	08MAY25	JAM	BSE
4	16APR25	JAM	JJR
3	14APR25	JAM	BSE

CHASSIS DATA
MAKE: PIERCE
MODEL: IMPEL FR

View File Created 17-SEP-2025 07:18:51