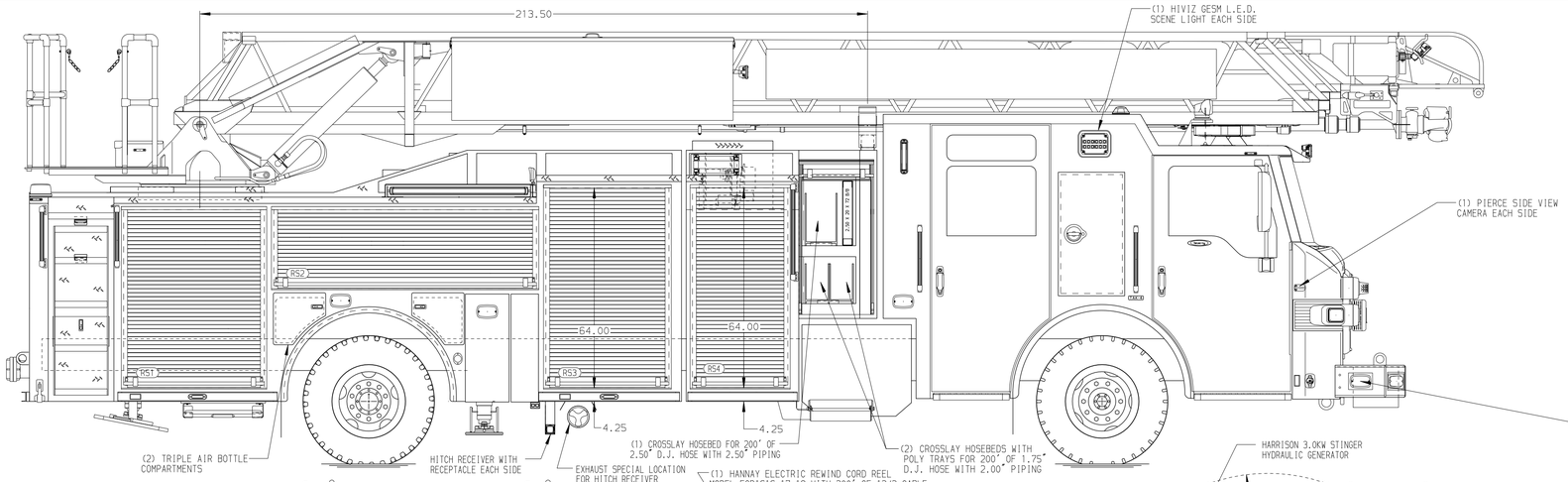


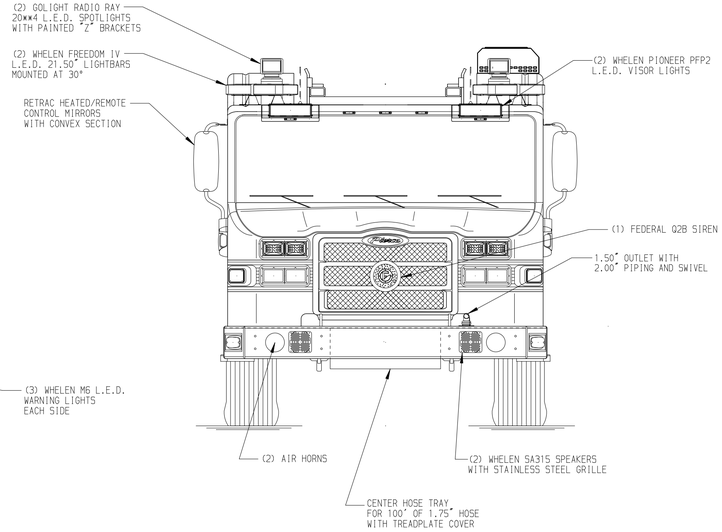


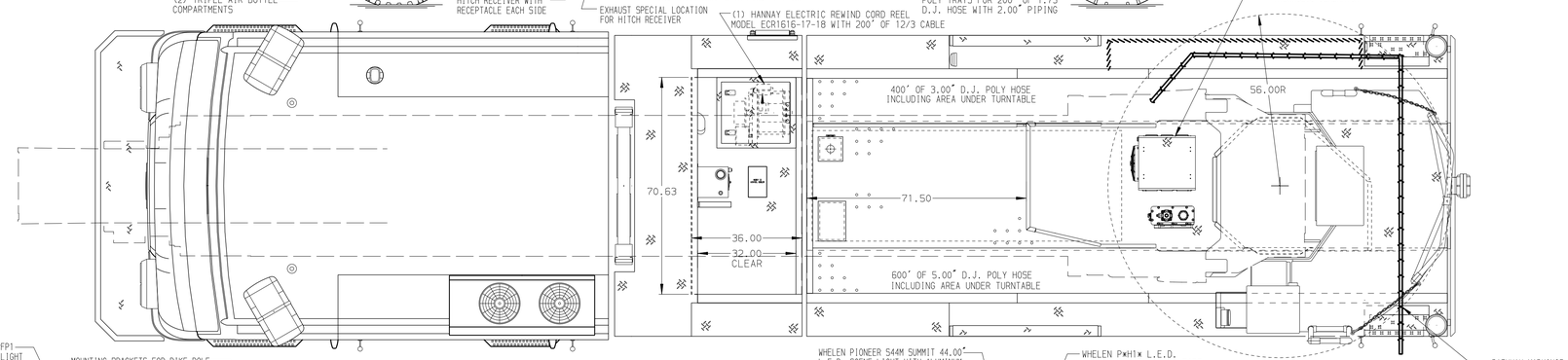


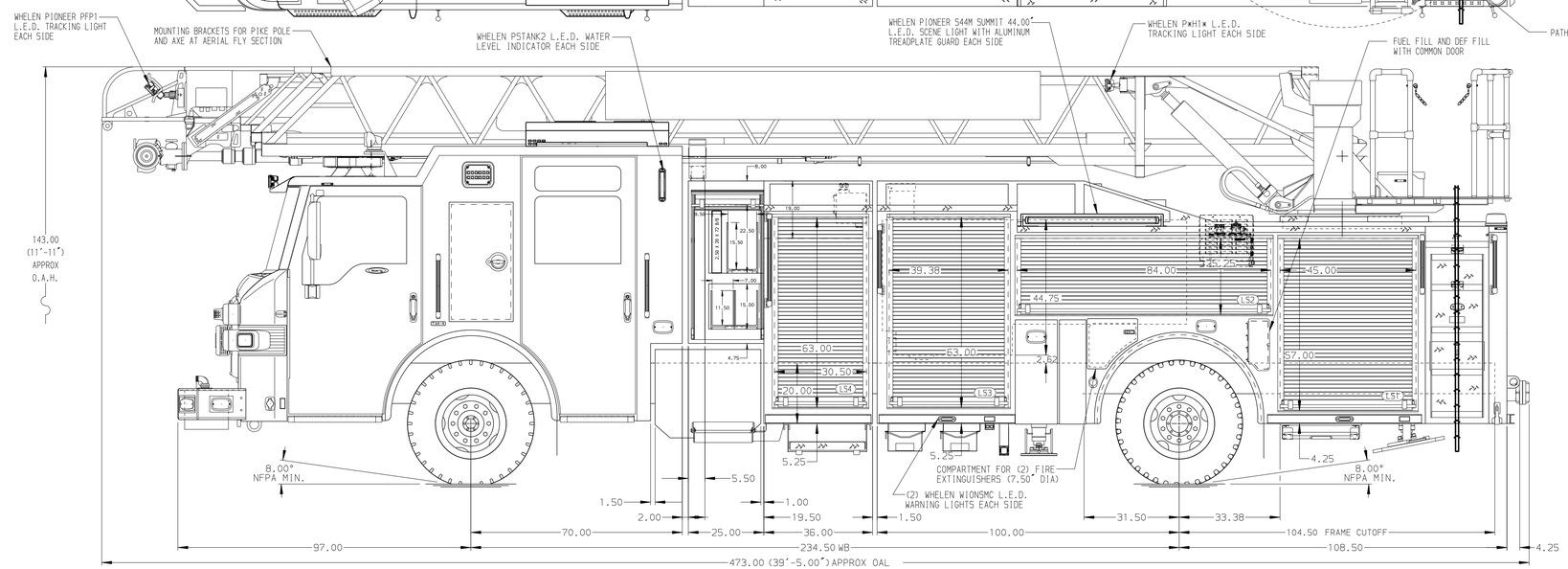


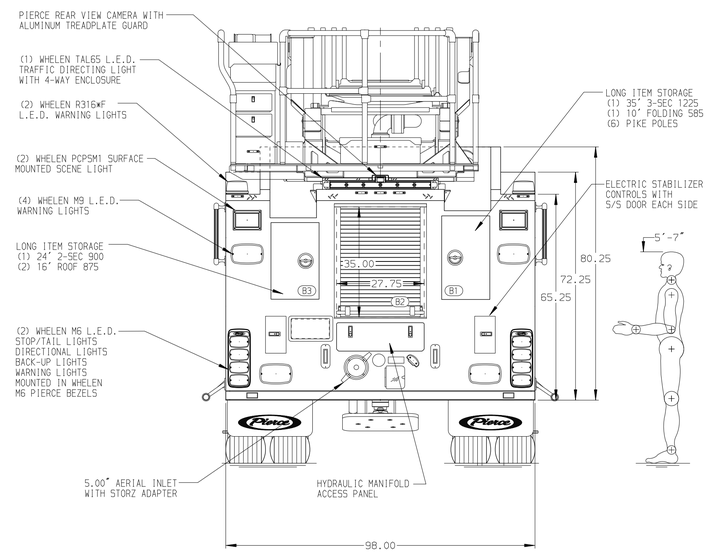


ALUMINUM BODY

FRONTAL IMPACT PROTECTION

NOTE

DIMENSIONS SHOWN ARE APPROXIMATE AND ARE SUBJECT TO MINOR DEVIATIONS AS MAY OCCUR OR BE NECESSARY IN CONSTRUCTION.
MINOR DETAILS NOT SHOWN.

1. NO LIMITED RETRACTION REQUIRED
2. ONE PEGBOARD ON BACK WALL OF COMPTMENT PER ORDER
3. SHORELINE RECEPTACLE WITH KUSOMAUL SUPER AUTO-EJECT LOCATED ON DRIVER SIDE CAB CORNER
4. AIR INLET KUSMAUL WITH COVER AND DISCONNECT COUPLING IN THE PASSENGER SIDE CAB CORNER
5. INVERTER/BATTERY CHARGER LOCATED PER ORDER
6. THREE 120V RECEPTACLE LOCATED PER ORDER
7. EIGHT ADJUSTABLE SHELVES LOCATED PER ORDER
8. THREE FLOOR MOUNTED SLIDE-OUT TRAYS LOCATED PER ORDER
9. NON-RAISED AERIAL PEDESTAL
10. LIFTING EYE ROPE RESCUE ATTACHMENT AT AERIAL TIP
11. 1500 GPM HIGH FLOW WATERWAY
12. AIR OUTLET WITH SHUT OFF VALVE PER ORDER
13. AUTOMATIC RUD TIRE CHAINS PER ORDER
14. CIRCUIT BREAKER PANEL PER ORDER
15. RUNG LIGHTING ON AERIAL LADDER PER ORDER
16. ONE SLIDE-OUT TRAY PER ORDER
17. TWO TILT/SLIDE-OUT TRAY PER ORDER

| REV | DATE | BY | CH |
|---|---|---|---|
| 7 | 16OCT25 | LWE | BYO |
| 6 | 14MAY25 | LWE | DTJ |
| 5 | 25MAR25 | LWE | GKH |
| 4 | 30JAN25 | LWE | BYO |

CHASSIS DATA
MAKE: PIERCE
MODEL: VELOCITY

Pierce MANUFACTURING INC.

TITLE: 107' ASCENDANT AERIAL LADDER AND BODY ASSEMBLY
500 GALLON TANK, 480 GAL WATER/20 GAL FOAM

FOR: ST. GEORGE FIRE DEPARTMENT
ST. GEORGE, UTAH

DWG NO.: 39667AD

| JOB NO. | 39667 |
|---|---|
| SCALE | 1:24 |
| DATE | |
| DRAWN BY | LWE 22JAN25 |
| CHECKED BY | BYO 27JAN25 |
| SHEET SIZE | D |
| SHEET NO. | 1 OF 1 |

View File Created 16-OCT-2025 10:55:17