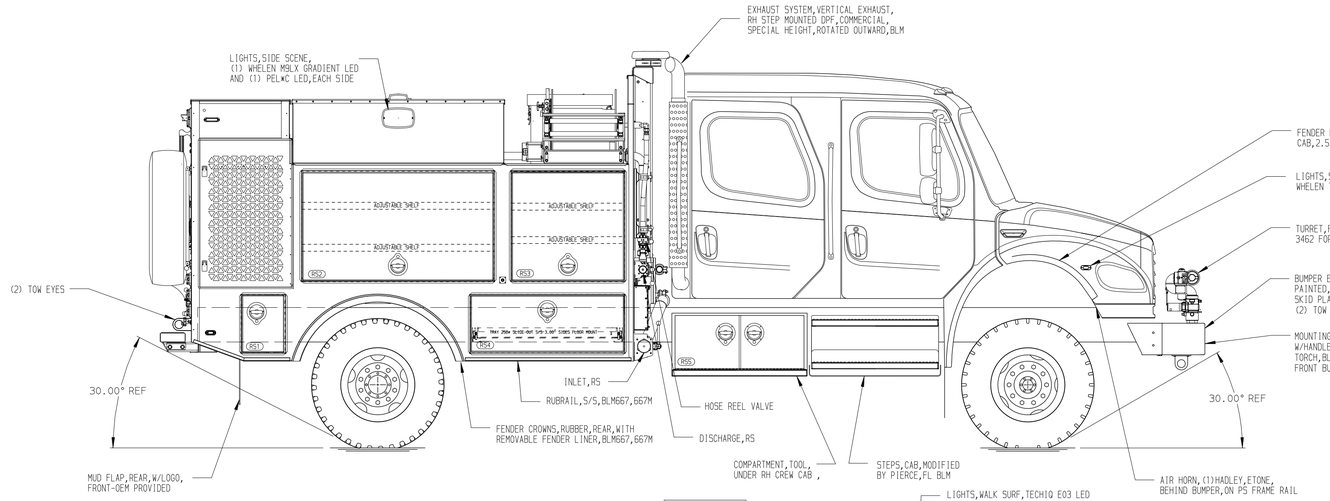

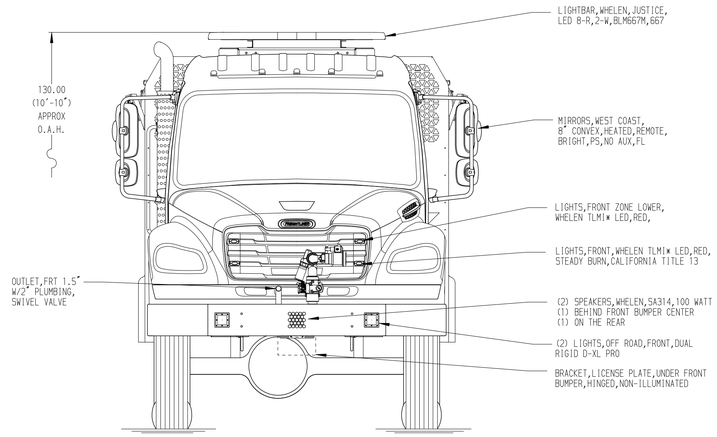

RIGHT SIDE COMPARTMENTS CONTAIN THE FOLLOWING:

COMPARTMENT RS1 CONTAINS:
- (1) FUEL COMPT,TRAY,S/S W/1" LIP

COMPARTMENT RS2 CONTAINS:
- (2)SHELVES,ADJUSTABLE,500 LB CAPACITY, S/S,UNPAINTED,W/SECONDARY RETENTION
- (1) FUEL COMPARTMENT TRAY FOR CHAINSAW, S/S WITH 1.0" LIP,BLM 667R

COMPARTMENT RS3 CONTAINS:
- (2)SHELVES,ADJUSTABLE,500 LB CAPACITY, S/S,UNPAINTED,W/SECONDARY RETENTION

COMPARTMENT RS4 CONTAINS:
- (1) TRAY,250LB SLIDE-OUT,S/S,3" SIDES, FLOOR MOUNTED,DUAL LOCKS,BLM

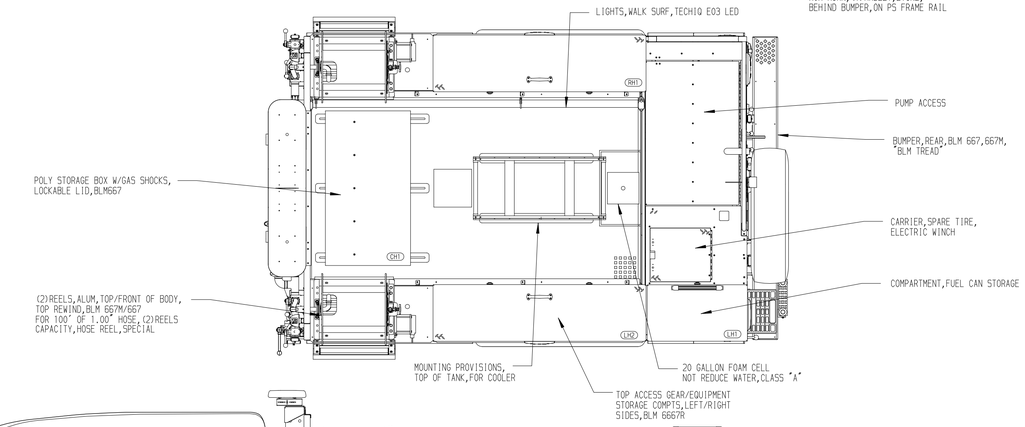

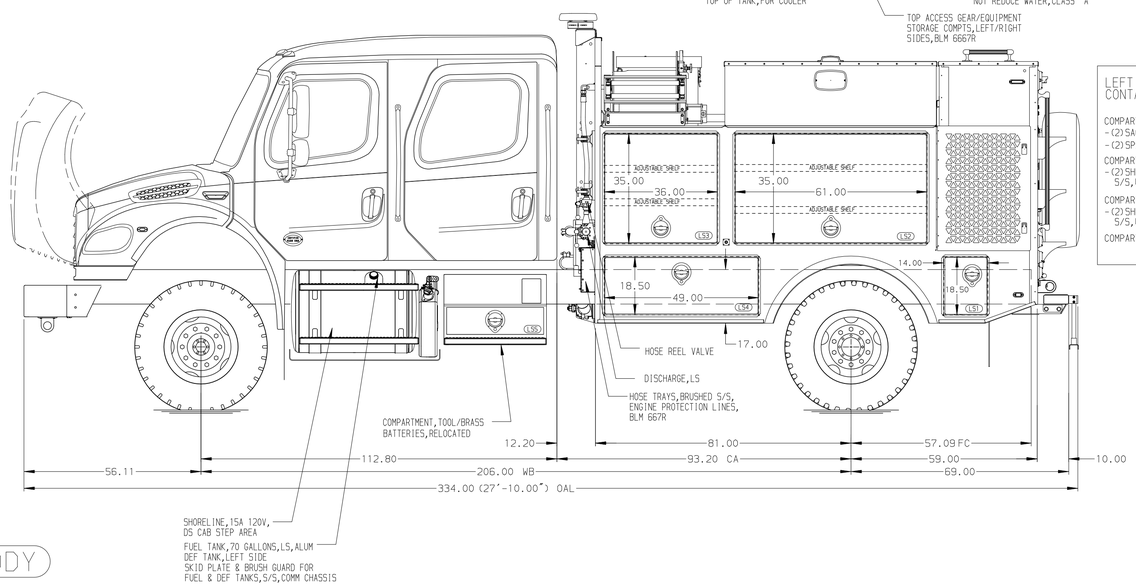

LEFT SIDE COMPARTMENTS CONTAIN THE FOLLOWING:

COMPARTMENT LS1 CONTAINS:
- (2)SAC-44-E WHEEL CHOCKS
- (2)SPARE TIRE CARRIER WINCH REMOTE

COMPARTMENT LS2 CONTAINS:
- (2)SHELF,ADJUSTABLE,500 LB CAPACITY, S/S,UNPAINTED,W/SECONDARY RETENTION

COMPARTMENT LS3 CONTAINS:
- (2)SHELVES,ADJUSTABLE,500 LB CAPACITY, S/S,UNPAINTED,W/SECONDARY RETENTION

COMPARTMENT LS4 CONTAINS:

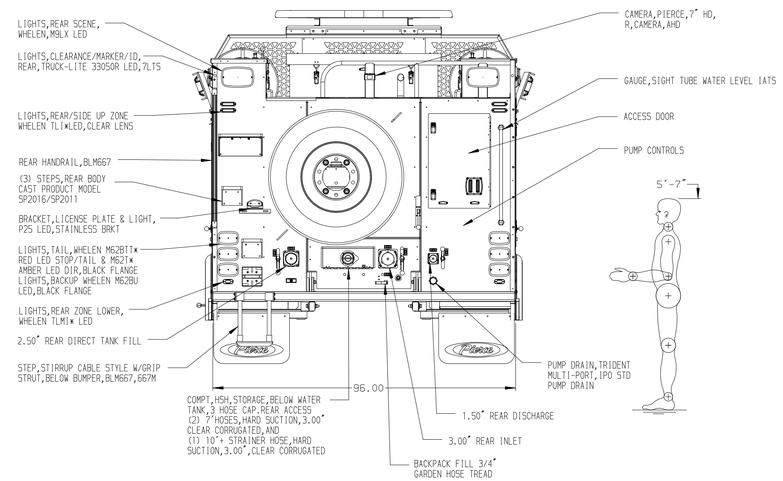

STAINLESS STEEL BODY

NOTE
DIMENSIONS SHOWN ARE APPROXIMATE AND ARE SUBJECT TO MINOR DEVIATIONS AS MAY OCCUR OR BE NECESSARY IN CONSTRUCTION.
MINOR DETAILS NOT SHOWN.

800 GALLON WATER TANK 3598594

NOTE: WINTERIZE BEFORE SHIPMENT,BLM667/667M

REV	DATE	BY	CH
3	18JUL24	VHO	NAS
2	16MAY24	RHU	NAS

CHASSIS DATA
MAKE: FL
MODEL: M2-106 PLUS 4x4

Pierce MANUFACTURING INC.

TITLE: 800 GAL WATER W/20 FOAM CELL,1.5AGE W/KUBOTA DARLEY (2) BOOSTER REELS, FOAM SYSTEM
FOR: BLM U.S. ARMY - TACOM MICHIGAN
DWG NO.: 39675AD

JOB NO.	39675
SCALE 1:24	DATE
DRAWN BY RWR	18DEC23
CHECKED BY AJA	21DEC23
SHEET SIZE D	SHEET NO. 1 OF 1

View File Created 22-JUL-2024 09:17:59