RIGHT SIDE COMPARTMENTS CONTAIN THE FOLLOWING:

COMPARTMENT RS1 CONTAINS:
- (1) VERTICAL COMPARTMENT DIVIDER
- (4) STD DEPTH ADJ SHELVES
- (1) RACK FOR 21 SCBA BOTTLES
- (1) 15/20A,120V DUPLEX RECEPTACLE
-
-

COMPARTMENT RS2 CONTAINS:
- (1) STD DEPTH ADJ SHELF
- (1) 15/20A,120V DUPLEX RECEPTACLE
-
-

COMPARTMENT RS3 CONTAINS:
- (1) STD DEPTH ADJ SLIDE OUT/TILT TRAY
- (1) 15/20A,120V DUPLEX RECEPTACLE
-
-

COMPARTMENT RS4 CONTAINS:
- (3) STD DEPTH ADJ SHELVES
- (1) STD DEPTH ADJ SLIDE OUT TRAY
- (1) 15/20A,120V DUPLEX RECEPTACLE
-

COMPARTMENT RS5 CONTAINS:
- (1) CAB LIFT CONTROLLER
- (1) RACK FOR 10 AIR BAGS
- (1) 2-WAY ADJ SLIDE OUT TRAY
- (1) 1/2 DEPTH ADJ SLIDE OUT/TILT TRAY
- (1) VERTICAL COMPARTMENT DIVIDER
- (1) HORIZONTAL FLOOR EXTENSION
- (1) STD DEPTH ADJ SHELF
- (1) 15/20A,120V DUPLEX RECEPTACLE
- (1) COMMAND LIGHT CONTROLLER
- (2) POLY TOOL BOXES

COMPARTMENT RS6 CONTAINS:
- (2) STOKES BASKET RACKS
- (2) 2-WAY ADJUSTABLE SHELVES
- (1) ELECTRIC CORD REEL WITH 200' OF 10/3 YELLOW CORD

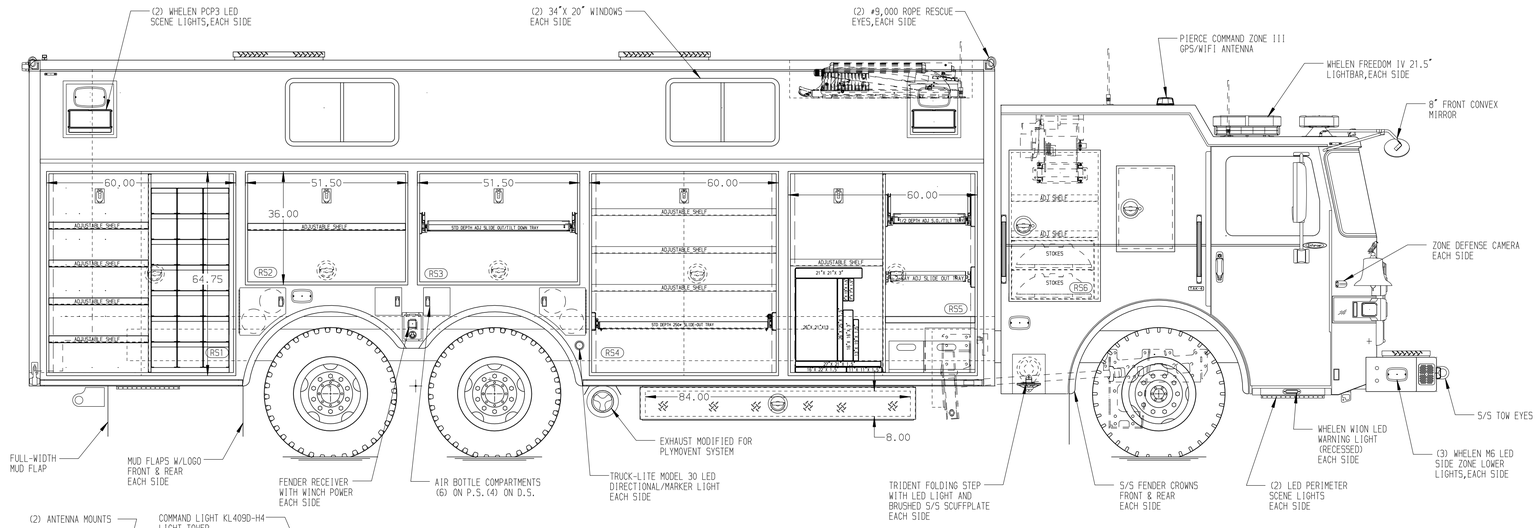

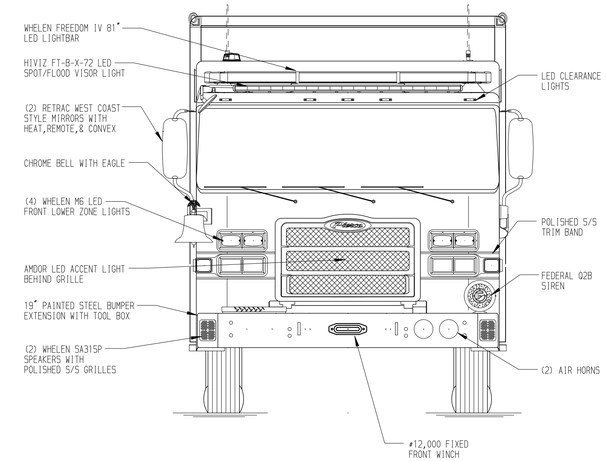

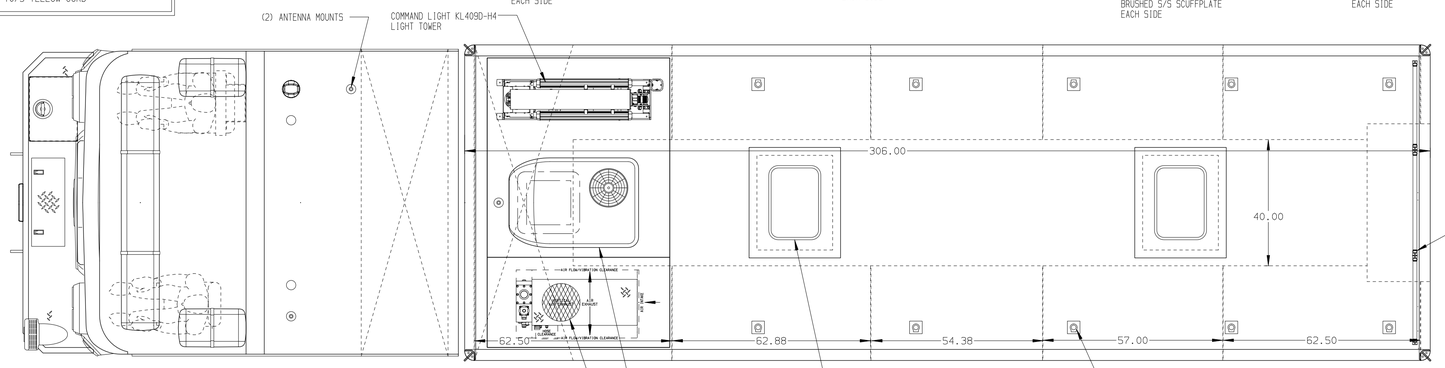

LEFT SIDE COMPARTMENTS CONTAIN THE FOLLOWING:

COMPARTMENT LS1 CONTAINS:
- (2) STD DEPTH 3/8" FLAT TOP SHELVES
- (1) STD DEPTH ADJ SHELF
- (1) FLOOR MOUNTED TRAY
- (1) 15/20A,120V DUPLEX RECEPTACLE
-
-

COMPARTMENT LS2 CONTAINS:
- (1) STD DEPTH ADJ SHELF
- (1) 15/20A,120V DUPLEX RECEPTACLE
-

COMPARTMENT LS3 CONTAINS:
- (1) STD DEPTH ADJ SLIDE OUT/TILT TRAY
- (1) 15/20A,120V DUPLEX RECEPTACLE
-

COMPARTMENT LS4 CONTAINS:
- (1) VERTICAL COMPARTMENT DIVIDER
- (3) STD DEPTH ADJ SHELVES
- (1) 2-DRAWER C-TECH CABINET
- (1) 3-DRAWER C-TECH CABINET
- (1) CIRCUIT BREAKER PANEL
- (1) GENERATOR METER PANEL
- (1) 15/20A,120V DUPLEX RECEPTACLE
-
-

COMPARTMENT LS5 CONTAINS:
- (1) 2-WAY ADJ SLIDE OUT TRAY
- (1) 1/2 DEPTH ADJ SLIDE OUT/TILT TRAY
- (1) VERTICAL COMPARTMENT DIVIDER
- (1) FLOOR MOUNTED TRAY
- (1) HORIZONTAL FLOOR EXTENSION
- PEGBOARD W/O HOLES ON REAR WALL OF COMPARTMENT REAR OF DIVIDER
- (1) STD DEPTH ADJ SHELF
- (1) 15/20A,120V DUPLEX RECEPTACLE
- (2) POLY TOOL BOXES

COMPARTMENT LS6 CONTAINS:
- (2) STOKES BASKET RACKS
- (2) 2-WAY ADJUSTABLE SHELVES
- (1) ELECTRIC CORD REEL WITH 200' OF 10/3 YELLOW CORD

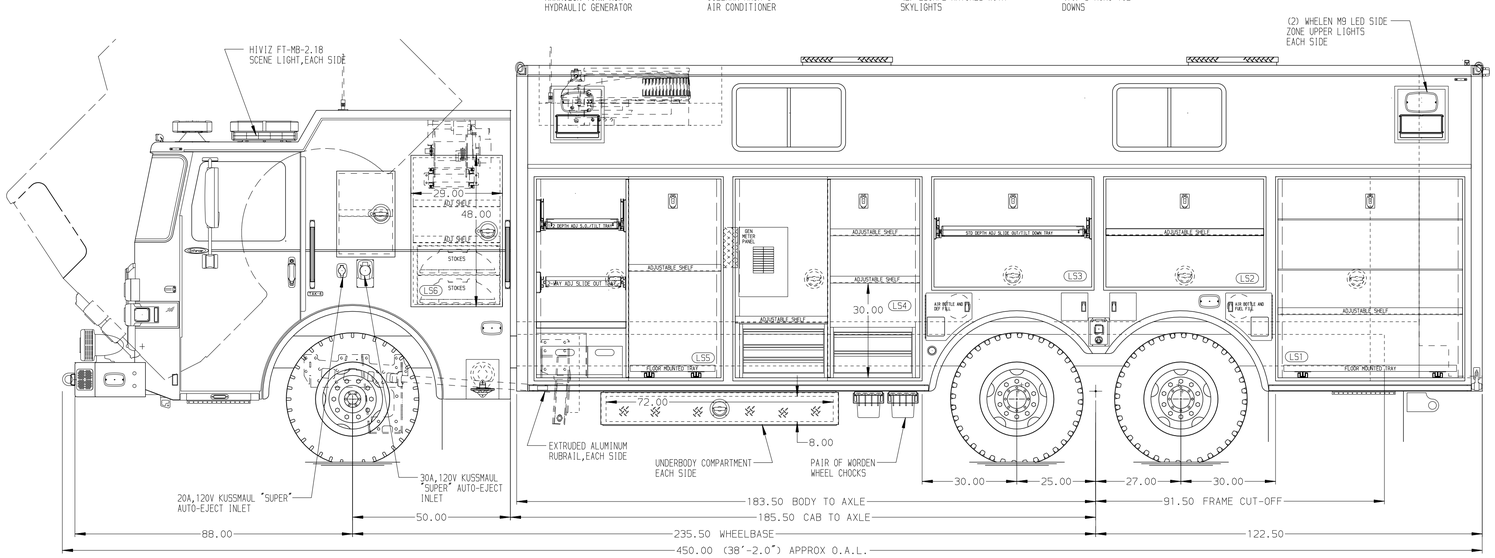

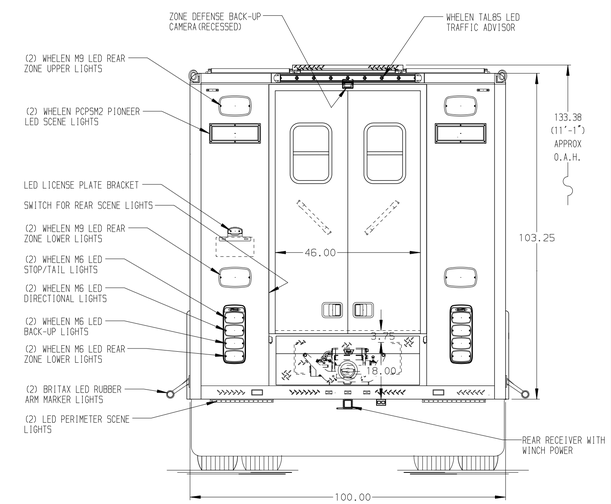

NOTE

DIMENSIONS SHOWN ARE APPROXIMATE AND ARE SUBJECT TO MINOR DEVIATIONS AS MAY OCCUR OR BE NECESSARY IN CONSTRUCTION.
MINOR DETAILS NOT SHOWN.

NOTES:
1. AIR INLET WITH DISCONNECT COUPLING LOCATED IN DRIVER'S STEP WELL OF CAB
2. POLISHED S/S SCUFFPLATES ON CAB DOOR JAMBS
3. FLOOR IN CAB TO BE PADDED RUBBER
4. KUSSMAUL IOTA 75 AMP CHARGER LOCATED BEHIND THE DRIVER'S SEAT
5. BATTERY CHARGE INDICATOR LOCATED ON DRIVER'S SEAT RISER
6. PULL STRAPS FOR LIFT UP DOORS

SIDE ROLL AND FRONTAL IMPACT PROTECTION

CLEAR DOOR WIDTH KEY	
AMDOR ROLL UP DOORS:	-2 1/4"
GORTITE ROLL UP DOORS:	-2 1/2"
PIERCE DOUBLE LAP DOORS:	-4 1/4"
PIERCE LIFT-UP LAP DOORS:	-1 1/2"
(EX: 60"F-F - 2 1/4"= 57 3/4" CLEAR) (F-F)= FRAME TO FRAME	

REV	DATE	BY	CH	
7	09OCT24	JGA	CDK	CHASSIS DATA
6	22AUG24	DHE	CDK	MAKE
5	08AUG24	DHE	CDK	PIERCE
4	07JUN24	SHD	CDK	MODEL
				EN5010

Pierce MANUFACTURING INC.

		JOB NO.	39679
		SCALE 1:24	DATE
TITLE	HEAVY DUTY RESCUE WALKIN	DRAWN BY DHE	24MAY24
FOR	CITY OF SUFFOLK, VIRGINIA BID #1182 ATLANTIC EMERGENCY SOLUTIONS,INC. MICHAEL YANCEY	CHECKED BY CDK	29MAY24
DWG NO.	39679AD-SH1	SHEET SIZE D	SHEET NO. 1 OF 1

View File Created 09-OCT-2024 14:27:49