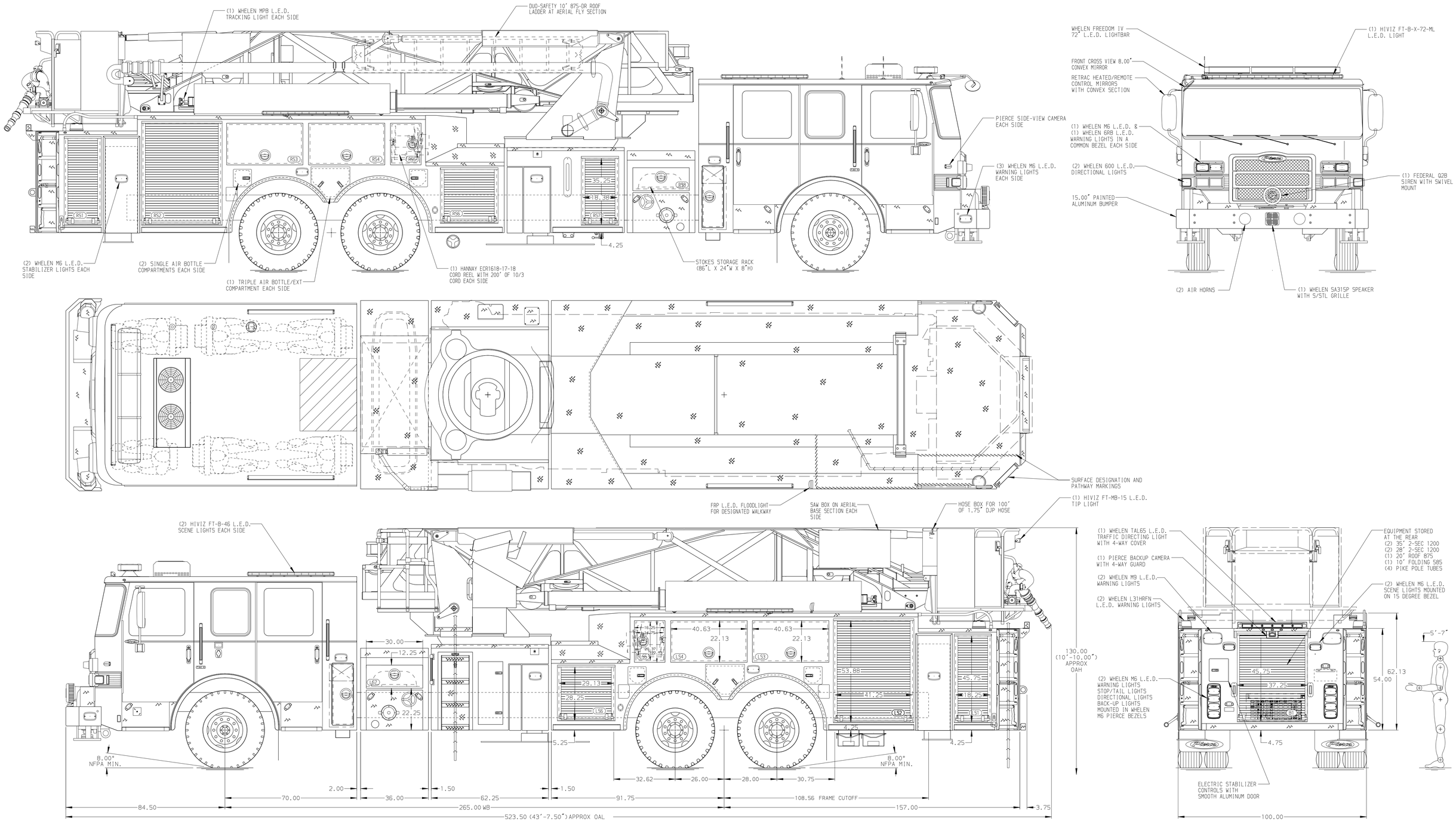

ALUMINUM BODY | SIDE ROLL AND FRONTAL IMPACT PROTECTION | MAXIMUM O.A.H. 130.00"

NOTE

DIMENSIONS SHOWN ARE APPROXIMATE AND ARE SUBJECT TO MINOR DEVIATIONS AS MAY OCCUR OR BE NECESSARY IN CONSTRUCTION.
MINOR DETAILS NOT SHOWN.

1. SHORELINE RECEPTACLE WITH KUSSMAUL SUPER AUTO-EJECT LOCATED ON DRIVER SIDE OF THE CAB
2. AIR INLET WITH DISCONNECT COUPLING IN THE DRIVER SIDE STEPWELL
3. BATTERY CHARGER LOCATED PER ORDER
4. BATTERY CHARGE INDICATOR LOCATED ON DRIVER SIDE OF CAB
5. TECNIQ 5-SECTION RUNG LIGHTING AT AERIAL DEVICE
6. TWO HIVIZ FT-MB-12-TR L.E.D. LIGHTS UNDER BASKET SIDE STEPS
7. 3-in-1 LYFECOMBO BRACKETS AT AERIAL BASKET
8. HARRISON BKW M1D8.0 HYDRAULIC GENERATOR IN B1 COMPARTMENT

REV	DATE	BY	CH
2	12MAY25	ANZ	CSH
1	10MAR25	ANZ	CSH

CHASSIS DATA
MAKE: PIERCE
MODEL: ENFORCER

Pierce MANUFACTURING INC.

TITLE: 100' ASCENDANT AERIAL TOWER AND BODY ASSEMBLY NO PUMP, NO TANK
FOR: DANBURY FIRE DEPARTMENT DANBURY, CT
DWG NO.: 39681AD-SH1

JOB NO.	39681
SCALE	1:24
DATE	
DRAWN BY	ANZ 09JAN25
CHECKED BY	BYO 21JAN25
SHEET SIZE	D
SHEET NO.	1 OF 2

View File Created 12-MAY-2025 13:36:17