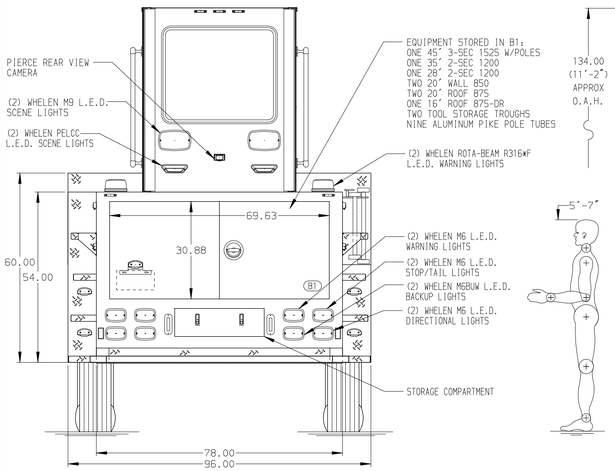

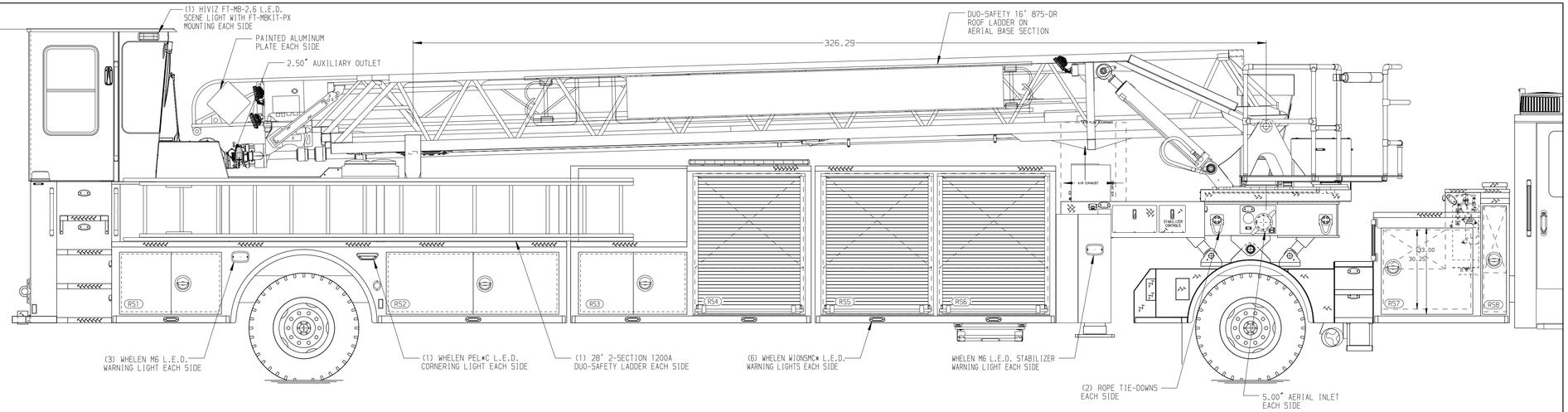

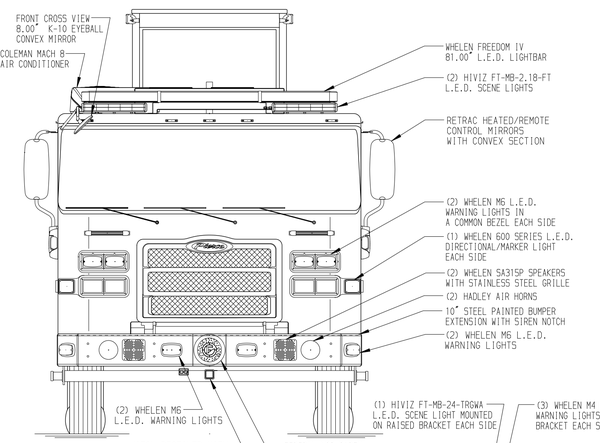

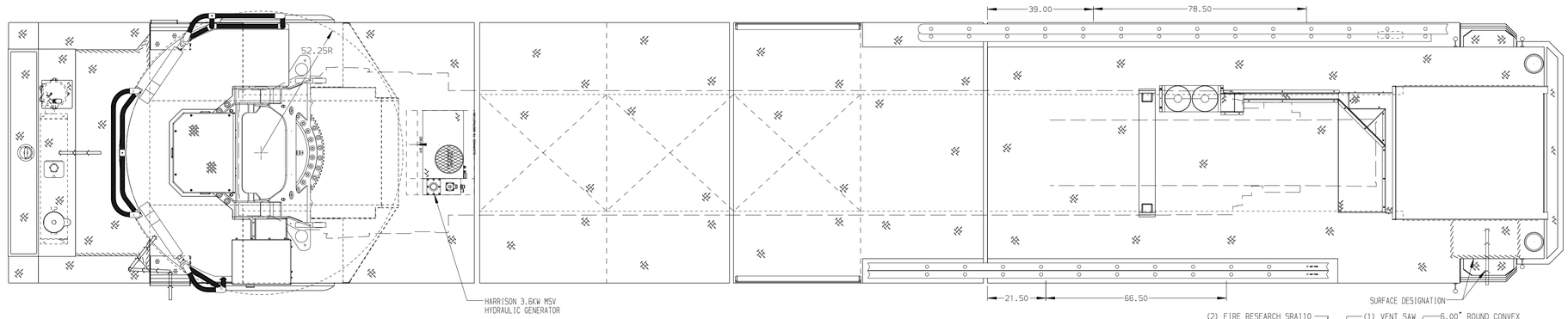

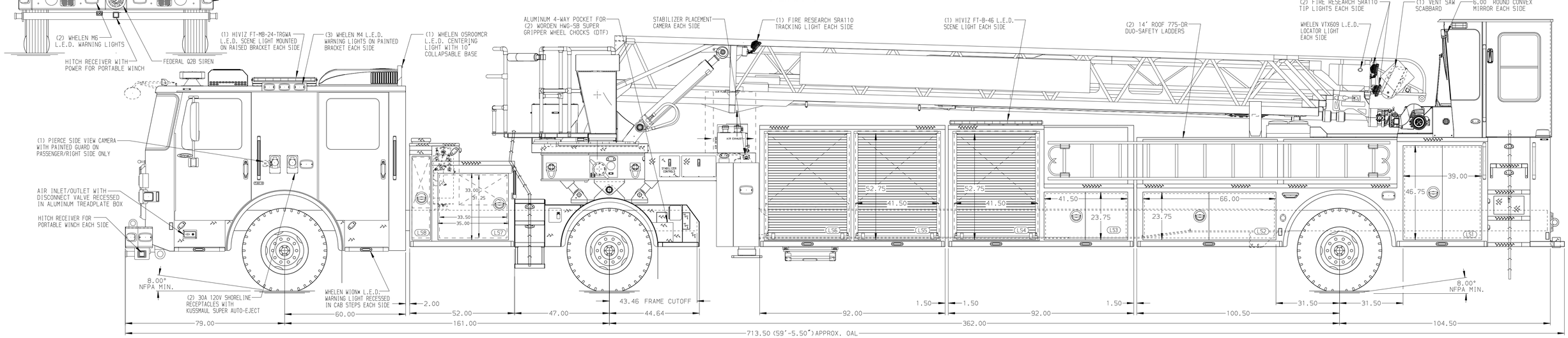

ALUMINUM BODY

SIDE ROLL AND FRONTAL IMPACT PROTECTION

NOTE

DIMENSIONS SHOWN ARE APPROXIMATE AND ARE SUBJECT TO MINOR DEVIATIONS AS MAY OCCUR OR BE NECESSARY IN CONSTRUCTION.
MINOR DETAILS NOT SHOWN.

1. AERIAL BOOM SUPPORT NOT RAISED
2. BATTERY CHARGER LOCATED BEHIND DRIVER SEAT
3. AIR HORN CONTROL AT AERIAL TURNTABLE
4. BATTERY CHARGER INDICATOR LOCATED ON DRIVER'S SEAT RISER
5. ONE 120V DUPLEX RECEPTACLE LOCATED IN EMS COMPARTMENT
6. TRIDENT FOLDING STEPS ON AERIAL DEVICE
7. L.E.D. LIGHTING ON AERIAL LADDER SECTIONS
8. LIFTING EYE ROPE RESCUE ATTACHMENT AT AERIAL TIP
9. 2-WAY INTERCOM SYSTEM BETWEEN AERIAL TIP AND TURNTABLE
10. DC POWER TO AERIAL TIP
11. LYFE PULLEY RESCUE SYSTEM AT AERIAL TIP WITH ROPE TIE BAR AT AERIAL BASE SECTION
12. STORAGE BOX FOR LYFE PULLEY ROPE TIE BAR AT AERIAL BASE SECTION

REV	DATE	BY	CH
V	11DEC24	SHU	KBO
V	02DEC24	SHU	KBO
V	10OCT24	SHU	KBO

CHASSIS DATA
MAKE: PIERCE
MODEL: ENFORCER

Pierce MANUFACTURING INC.

TITLE: 107' ASCENDANT AERIAL TILLER AND BODY ASSY NO PUMP/NO TANK
FOR: DALLAS FIRE DEPARTMENT DALLAS, TX
DWG NO.: 39696AD-SH1

JOB NO.	39696
SCALE	1:24
DATE	
DRAWN BY	SHU 23AUG24
CHECKED BY	KBO 26AUG24
SHEET SIZE	D
SHEET NO.	1 OF 1

View File Created 11-DEC-2024 12:56:50