PASSENGER'S SIDE COMPARTMENTS CONTAIN THE FOLLOWING:

COMPARTMENT P1 CONTAINS:
- (1) FLOOR MOUNTED TRAY
- (1) STD DEPTH ADJ SHELF
-

COMPARTMENT P2 CONTAINS:
- (1) STD DEPTH ADJ SLIDE OUT/TILT TRAY
-
-
-
-

COMPARTMENT P3 CONTAINS:
- (1) 1/2 DEPTH ADJ SHELF
- (1) FLOOR MOUNTED TRAY
- (1) 1/2 DEPTH ADJ SLIDE OUT TRAY
- (4) POLY TOOL BOXES
-
-
-

COMPARTMENT P4 CONTAINS:
- (1) 1/2 DEPTH ADJ SLIDE OUT/TILT TRAY
- (1) FLOOR MOUNTED TRAY
- (1) CAB LIFT CONTROLLER
- (2) 2-WAY ADJ SLIDE OUT TRAYS
-
-
-

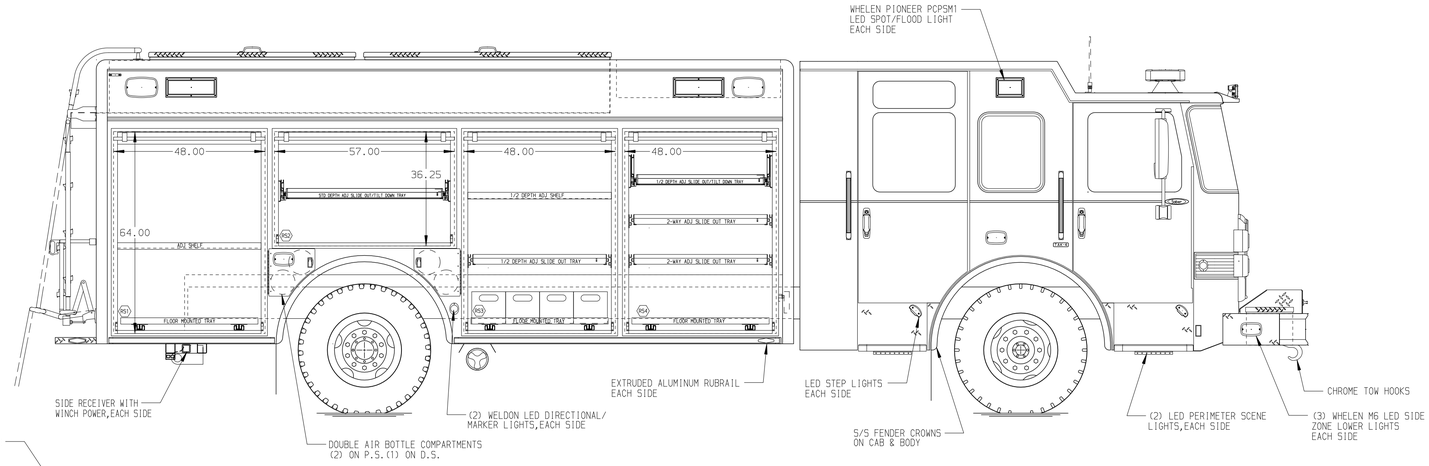

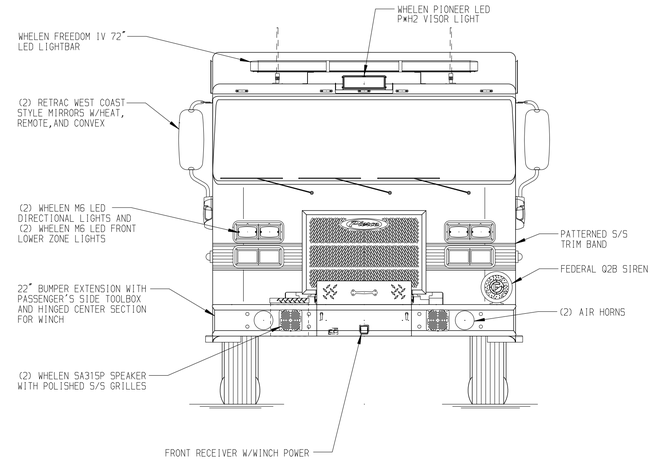

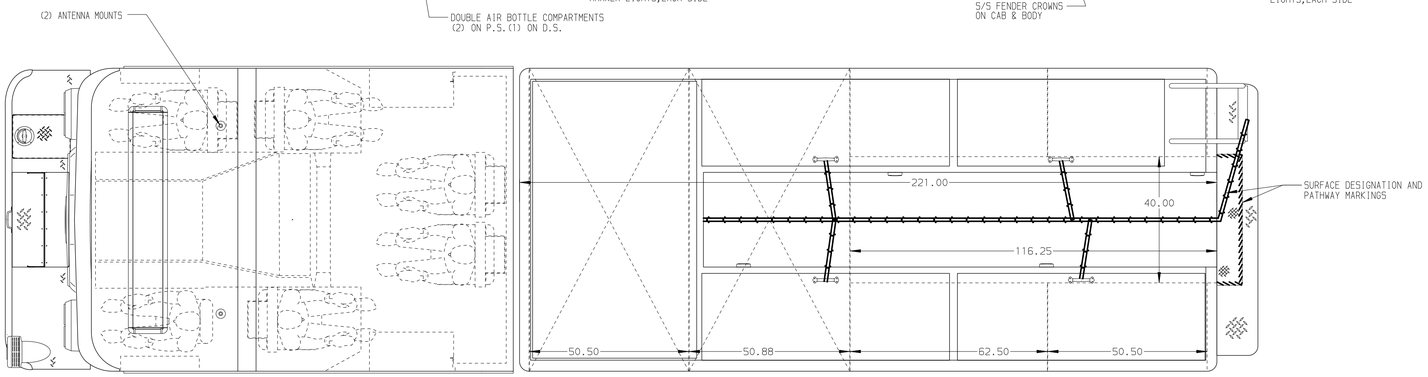

REAR COMPARTMENT CONTAINS THE FOLLOWING:

COMPARTMENT R1 CONTAINS:
- (1) 110"DP SLIDE OUT TRAY
- (1) FLOOR MOUNTED TRAY
- (1) STOKES BASKET RACK
-

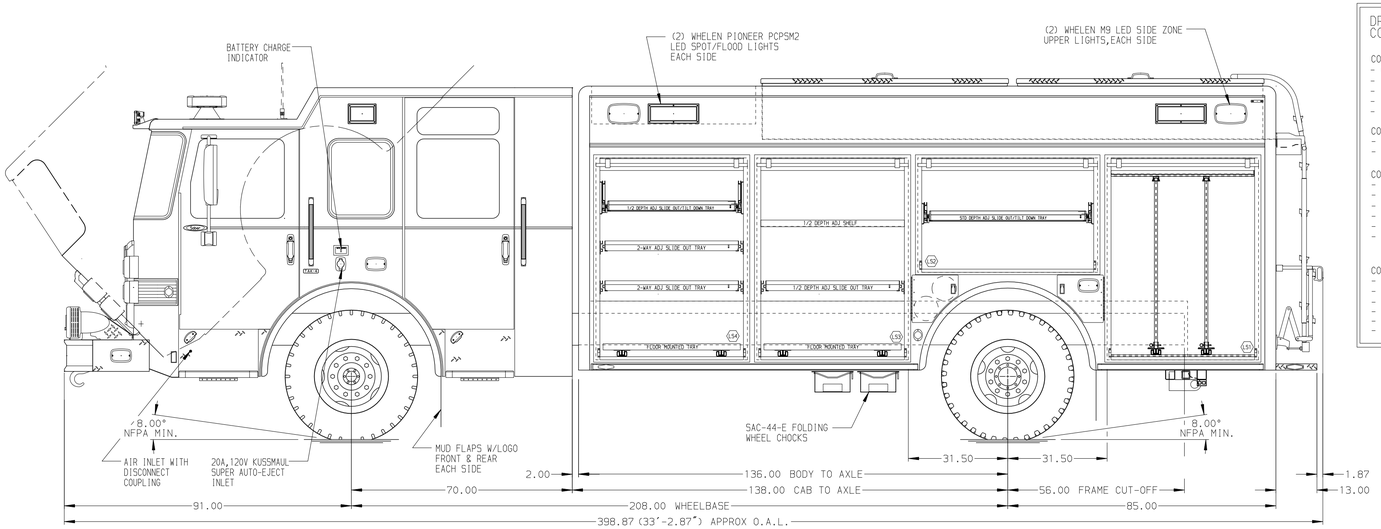

DRIVER'S SIDE COMPARTMENTS CONTAIN THE FOLLOWING:

COMPARTMENT D1 CONTAINS:
- (2) STD DEPTH ADJ SLIDE OUT TOOLBOARDS
-
-
-
-

COMPARTMENT D2 CONTAINS:
- (1) STD DEPTH ADJ SLIDE OUT/TILT TRAY
-

COMPARTMENT D3 CONTAINS:
- (1) 1/2 DEPTH ADJ SHELF
- (1) 1/2 DEPTH ADJ SLIDE OUT TRAY
- (1) FLOOR MOUNTED TRAY
-
-
-

COMPARTMENT D4 CONTAINS:
- (1) 1/2 DEPTH ADJ SLIDE OUT/TILT TRAY
- (2) 2-WAY ADJ SLIDE OUT TRAYS
- (1) FLOOR MOUNTED TRAY
-
-
-

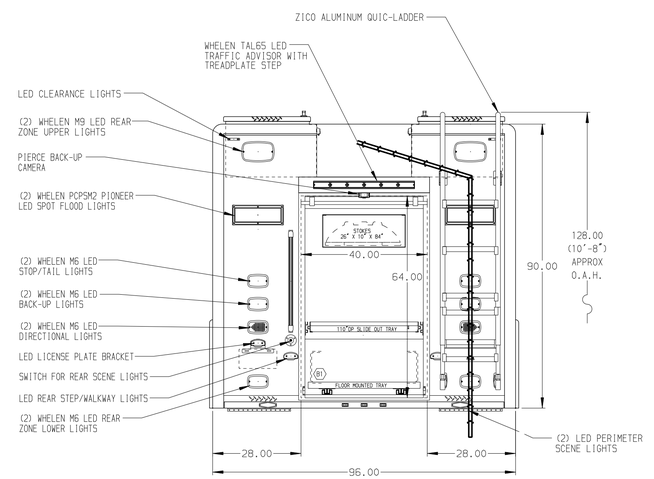

NOTE

DIMENSIONS SHOWN ARE APPROXIMATE AND ARE SUBJECT TO MINOR DEVIATIONS AS MAY OCCUR OR BE NECESSARY IN CONSTRUCTION.
MINOR DETAILS NOT SHOWN.

NOTES:
1. WARN #9,000 PORTABLE WINCH
2. FLOOR IN CAB AND CREW CAB TO BE PADDED RUBBER
3. PULL STRAPS ON ALL BODY ROLL UP DOORS
4. PIERCE LED LIGHT STRIPS IN ALL BODY AND HATCH COMPARTMENTS
5. IOTA 75 AMP BATTERY CHARGER LOCATED BEHIND THE DRIVER'S SEAT
6. S/S GUARDS ON ALL BODY ROLL-UP DOORS

SIDE ROLL & FRONTAL IMPACT PROTECTION

CLEAR DOOR WIDTH KEY	
AMDOR ROLL UP DOORS:	-2 1/4"
GORTITE ROLL UP DOORS:	-2 1/2"
PIERCE DOUBLE LAP DOORS:	-4 1/4"
PIERCE LIFT-UP LAP DOORS:	-1 1/2"
(EX: 60"F-F - 2 1/4"= 57 3/4" CLEAR) (F-F)= FRAME TO FRAME	

REV	DATE	BY	CH
	-	-	-

CHASSIS DATA
MAKE: PIERCE
MODEL: SBFR7010

CUSTOMER APPROVAL
APPROVED BY:
DATE:

Pierce MANUFACTURING INC.

TITLE: HEAVY DUTY RESCUE NON-WALKIN
FOR: PIERCE STOCK -
DWG NO.: 39711AD

JOB NO.	39711
SCALE 1:24	DATE
DRAWN BY DHE	01NOV22
CHECKED BY THS	01NOV22
SHEET SIZE D	SHEET NO. 1 OF 1

View File Created 01-NOV-2022 11:10:38