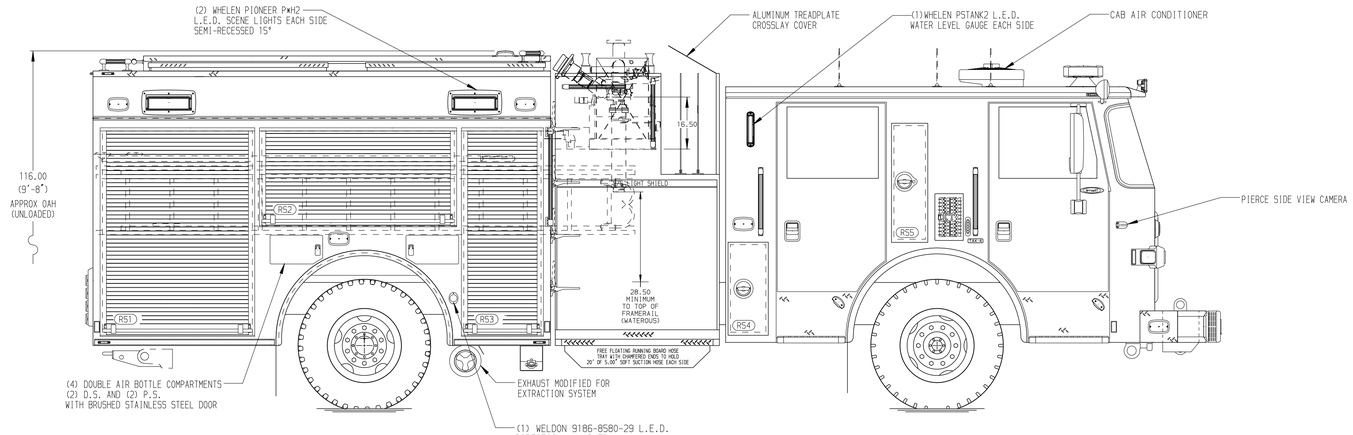

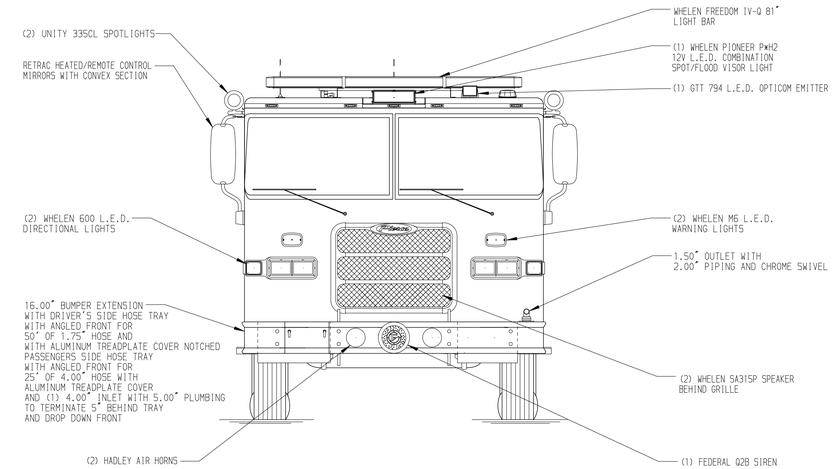

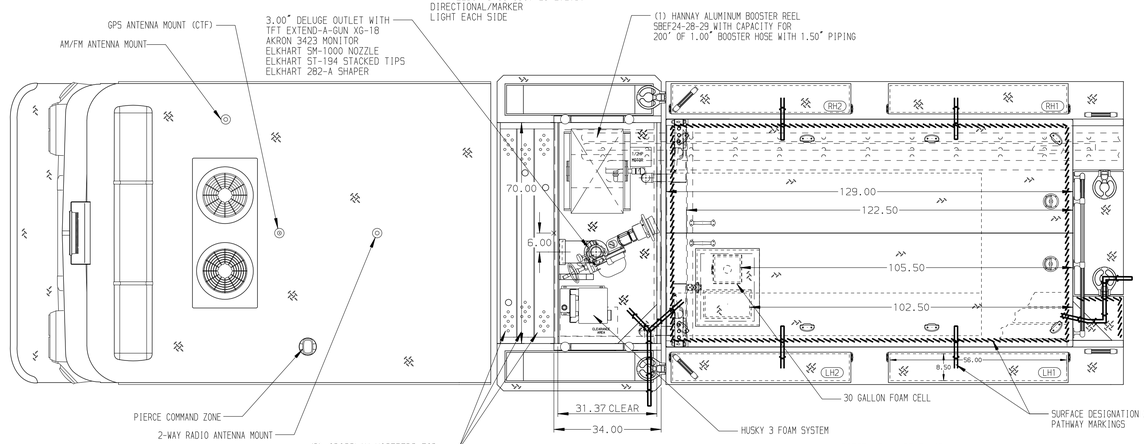

HOSEBED CAPACITIES

1. 200' OF 2.50" DJP HOSE
2. 1000' OF 4.00" DJP HOSE
3. 500' OF 2.50" DJP HOSE
4. 500' OF 2.50" DJP HOSE
5. 200' OF 1.75" DJP HOSE

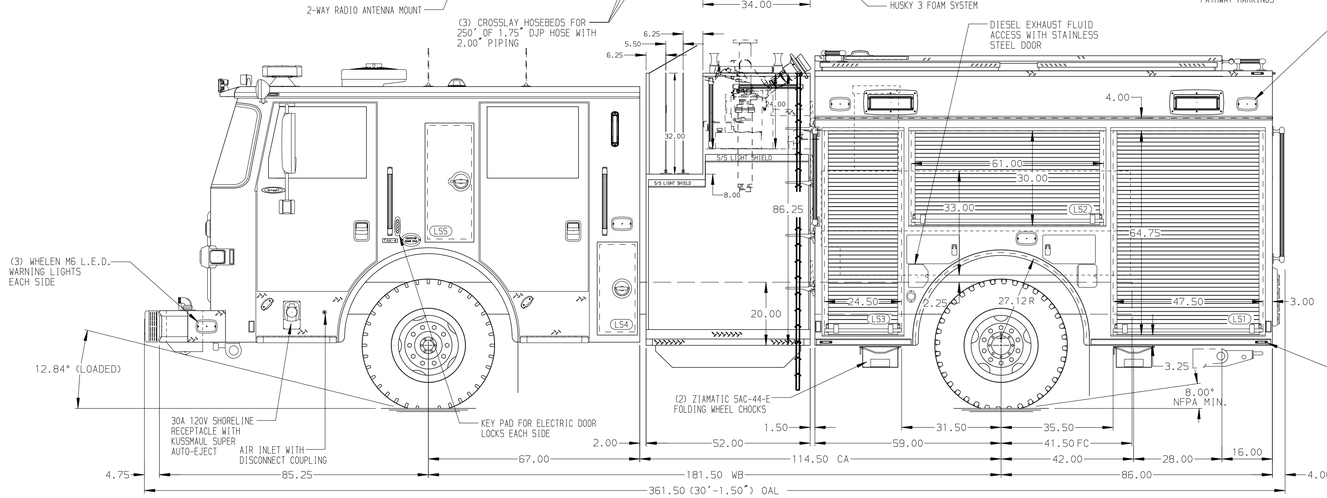

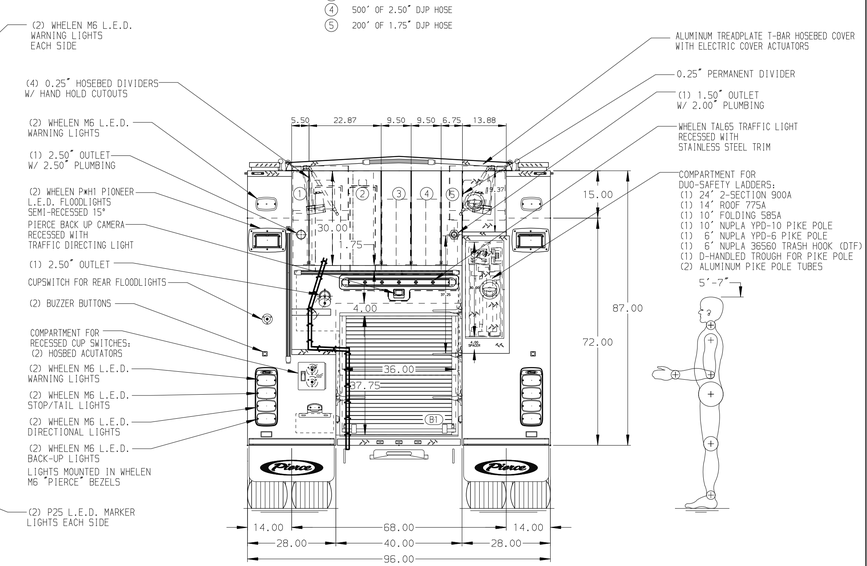

ALUMINUM BODY

MAXIMUM O.A.H. 116.00"

NOTE

DIMENSIONS SHOWN ARE APPROXIMATE AND ARE SUBJECT TO MINOR DEVIATIONS AS MAY OCCUR OR BE NECESSARY IN CONSTRUCTION.
MINOR DETAILS NOT SHOWN.

1. AIR OUTLET WITH SHUT OFF VALVE LOCATED ON DRIVER'S SIDE PUMP PANEL
2. BATTERY CHARGER LOCATED INSIDE DRIVER'S SIDE EMS CABINET PER ORDER
3. BATTERY CHARGER INDICATOR LOCATED AT DRIVER'S SEAT ON BRACKET PER ORDER
4. SUB-FEED CIRCUIT BREAKER PANEL LOCATED PER ORDER
5. ELECTRIC DOOR LOCKS ON BODY DOORS PER ORDER
6. 3M SCUFFTAPE POLY TAPE LOCATED IN SIDE COMPARTMENTS PER ORDER
7. EIGHT ADJUSTABLE FULL WIDTH/DEPTH SHELVES WITH SPECIAL SIDE HEIGHTS LOCATED PER ORDER
8. TWO ADJUSTABLE SPECIAL HEIGHT/MOUNTING/ANGLED SIDE SHELVES LOCATED PER ORDER
9. TWO CTECH DRAWER ASSEMBLIES LOCATED PER ORDER
10. ONE SWING-OUT TOOLBOARD SPECIAL HEIGHT LOCATED PER ORDER
11. PARTITION BETWEEN COMPARTMENTS LS1/B1 AND RS1/B1
12. FIVE NYLON STRAPS WITH LATCH LOCATED PER ORDER
13. THREE HORIZONTAL EQUIPMENT MOUNTING TRACKS LOCATED PER ORDER
14. FOUR ZICO HOLDERS KD-LP-5-SFPHS HOLDERS LOCATED PER ORDER

REV	DATE	BY	CH
3	14JUL25	SJM	DTJ
2	29MAY25	KLE	DTJ
1	26MAR25	SJM	KLH

CHASSIS DATA
MAKE: PIERCE
MODEL: ARROW XT

Pierce MANUFACTURING INC.

TITLE: 1750GPM, 530G TANK, 500G WATER, 30G FOAM
145" 2G PUMPER, MUX

FOR: ORANGE CITY FIRE DEPARTMENT
ORANGE, CALIFORNIA

DWG NO.: 39727AD

JOB NO.	39727
SCALE	1:24
DATE	
DRAWN BY	SJM 10FEB24
CHECKED BY	KLH 10FEB25
SHEET SIZE	D
SHEET NO.	1 OF 1

View File Created 18-JUL-2025 12:10:49