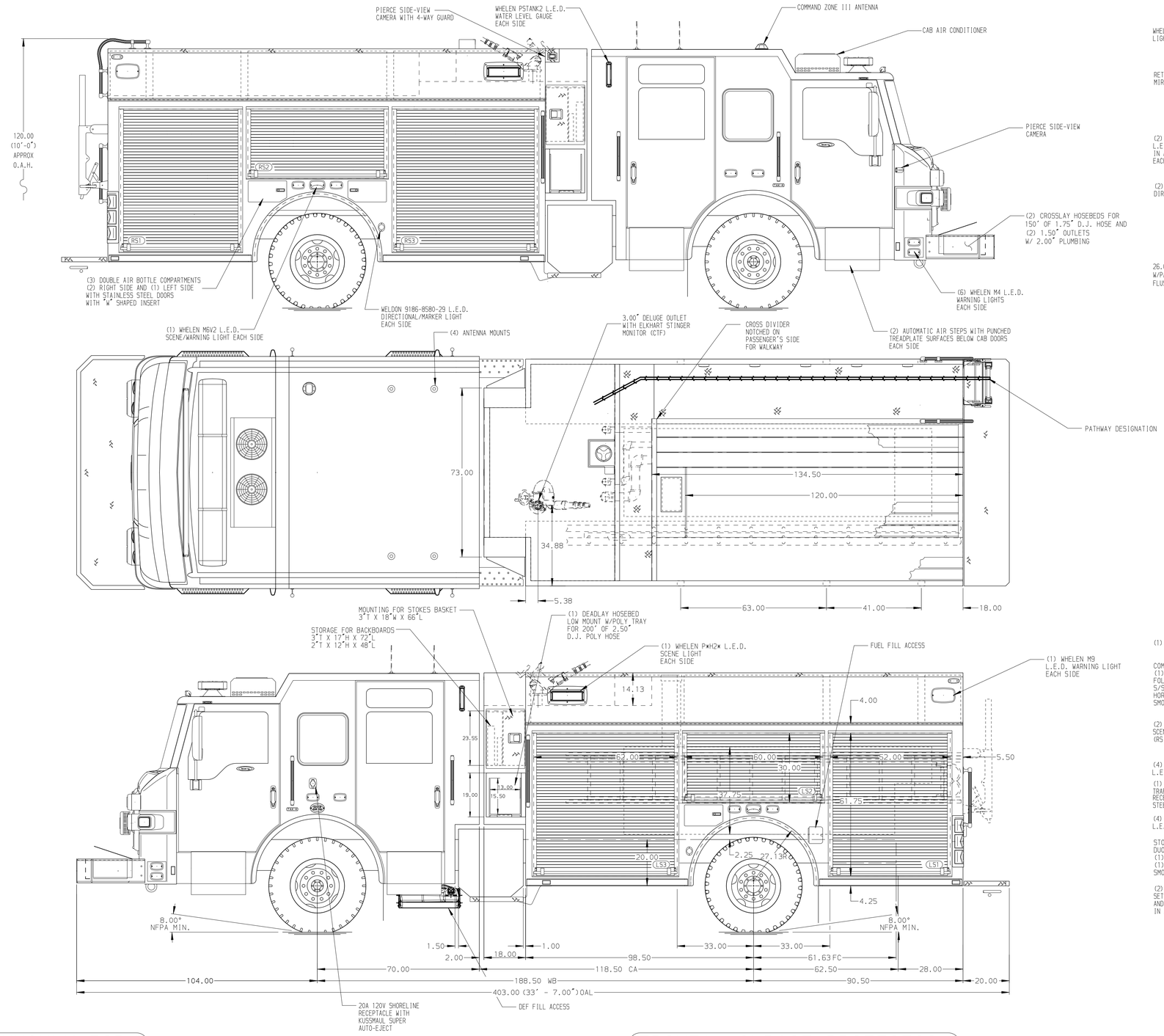

ALUMINUM BODY

FRONTAL IMPACT PROTECTION

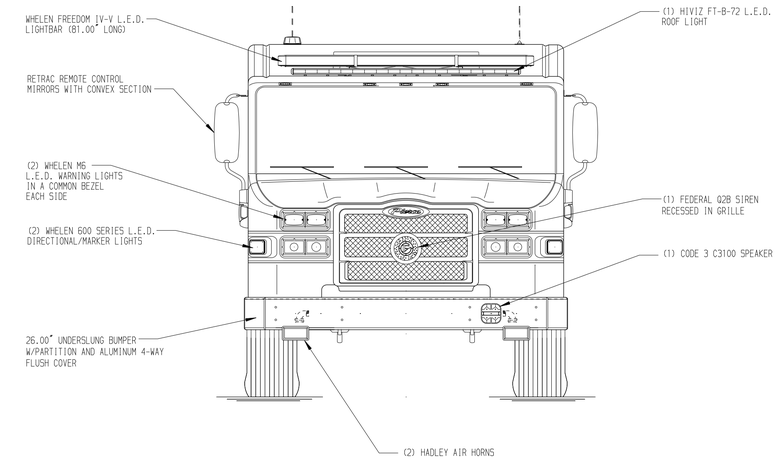

HOSEBED CAPACITIES

1. 500' OF 3.00" D.J. POLY HOSE
2. 1000' OF 5.00" D.J. POLY HOSE
3. 200' OF 2.50" D.J. POLY HOSE
4. 200' OF 1.75" D.J. POLY HOSE
5. 200' OF 1.75" D.J. POLY HOSE

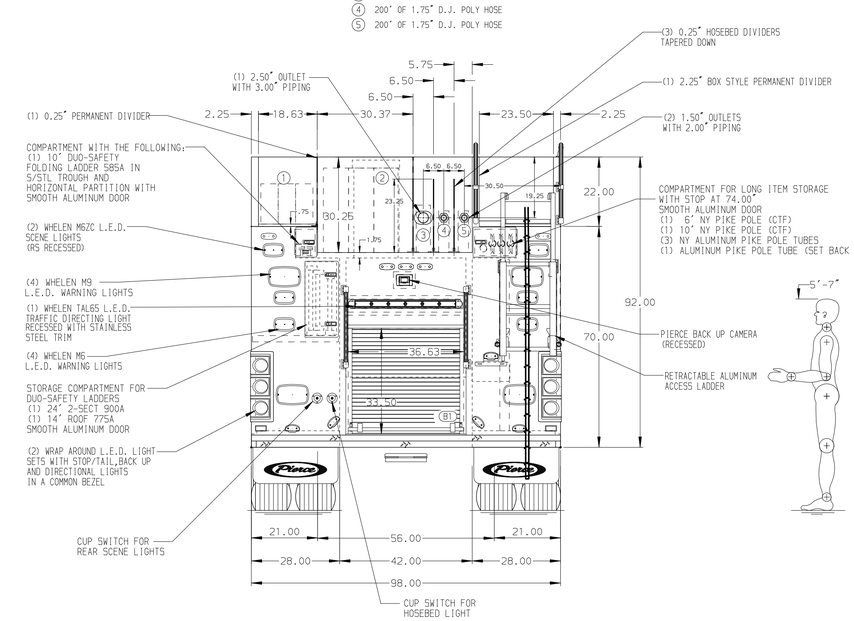

NOTE

DIMENSIONS SHOWN ARE APPROXIMATE AND ARE SUBJECT TO MINOR DEVIATIONS AS MAY OCCUR OR BE NECESSARY IN CONSTRUCTION.
MINOR DETAILS NOT SHOWN.

1. CTF WHEEL CHOCKS AND MOUNTING BRACKETS
2. AIR INLET/OUTLET WITH DISCONNECT COUPLING ON LS PUMP PANEL
3. BATTERY CHARGER LOCATED IN RS2
4. BATTERY CHARGER INDICATOR LOCATED ON DRIVER'S SIDE SEAT WITH BRACKET

REV	DATE	BY	CH
E	12AUG25	LST	ZWE
D	11JUN25	LST	ZWE
C	07MAY25	LST	ZWE
B	01MAY25	LST	ZWE
A	13MAR25	LST	KLH

CHASSIS DATA
MAKE: PIERCE
MODEL: VELOCITY

Pierce MANUFACTURING INC.

TITLE: 1500 GPM, 650 GAL WATERTANK 189" PUC BODY, VELCOITY ESP ELECTRICAL SYSTEM
FOR: CITY OF LARGO LARGO, FLORIDA
DWG NO.: 39729AD

JOB NO.	39729
SCALE	1:24
DATE	
DRAWN BY	LST 25FEB25
CHECKED BY	KLH 26FEB25
SHEET SIZE	D
SHEET NO.	1 OF 1

View File Created 13-AUG-2025 08:54:09