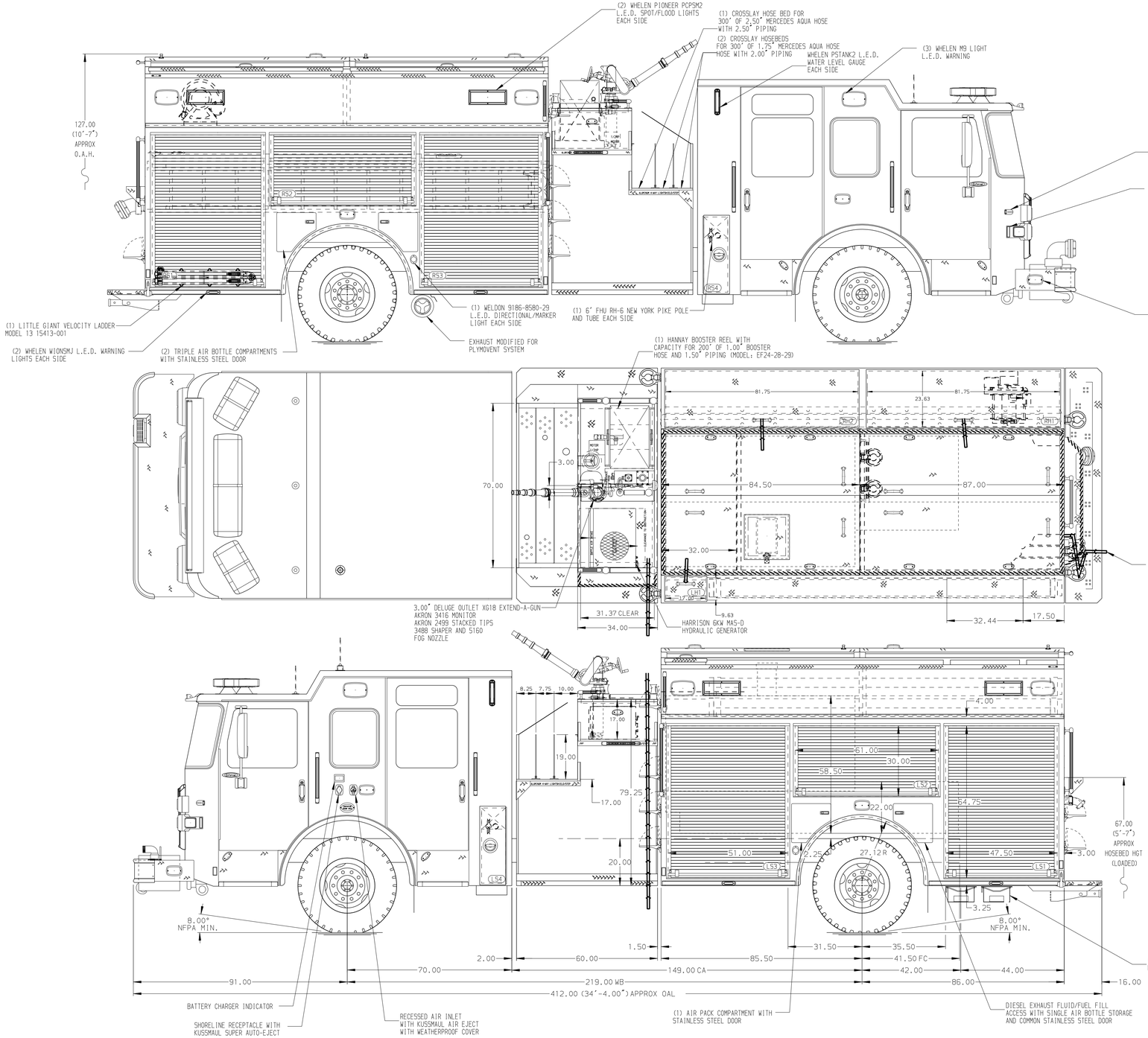

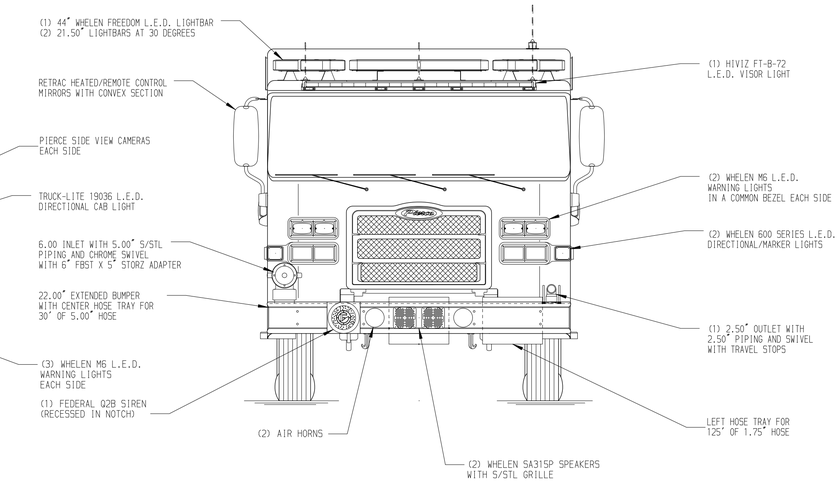

HOSEBED CAPACITIES

1. 400' OF 1.75" MERCEDES KRACKEN X0 DJ IN A SINGLE STACK
2. 500' OF 2.50" MERCEDES KRACKEN X0 DJ IN A DOUBLE STACK
3. 500' OF 3.00"MERCEDES KRACKEN X0 DJ IN A DOUBLE STACK
4. 1500' OF 5.00" SNAP-TITE TPX HOSE

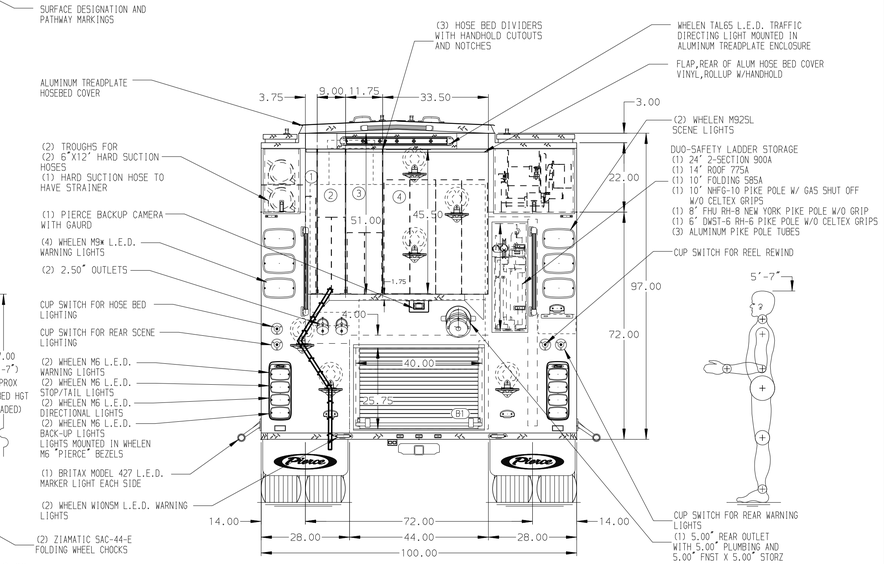

(ALUMINUM BODY) (MAXIMUM O.A.H. 128.00")

NOTE

DIMENSIONS SHOWN ARE APPROXIMATE AND ARE SUBJECT TO MINOR DEVIATIONS AS MAY OCCUR OR BE NECESSARY IN CONSTRUCTION.
MINOR DETAILS NOT SHOWN.

1. BATTERY CHARGER LOCATED BEHIND DRIVER'S SEAT
2. ONE ADJUSTABLE 0.38" PLATE IN COMPARTMENT RS1 ABOVE LITTLE GIANT
3. CIRCUIT BREAKER PANEL IN COMPARTMENT LS3
4. ONE HANNAY ELECTRIC REWIND CORD REEL MODEL 1618-17-18 WITH 200' OF 10/4 LOCATED IN R5 HATCH

REV	DATE	BY	CH
7	16JAN26	JAM	COS
6	19NOV25	JAM	COS
5	18AUG25	JAM	COS
4	12AUG25	JAM	COS
3	26JUN25	JAM	SJS

CHASSIS DATA
MAKE: PIERCE
MODEL: ENFORCER

Pierce MANUFACTURING INC.

TITLE: 2000 GPM, 1000 GALLON WATERTANK 171 2G PUMPER, HARD WIRED
FOR: EWING, TOWNSHIP OF-FIRE DIVISION EWING, NEW JERSEY
DWG NO.: 39742AD

JOB NO.	39742
SCALE 1:24	DATE
DRAWN BY JAM	10APR25
CHECKED BY SZE	11APR25
SHEET SIZE D	SHEET NO. 1 OF 1

View File Created 16-JAN-2026 09:56:53