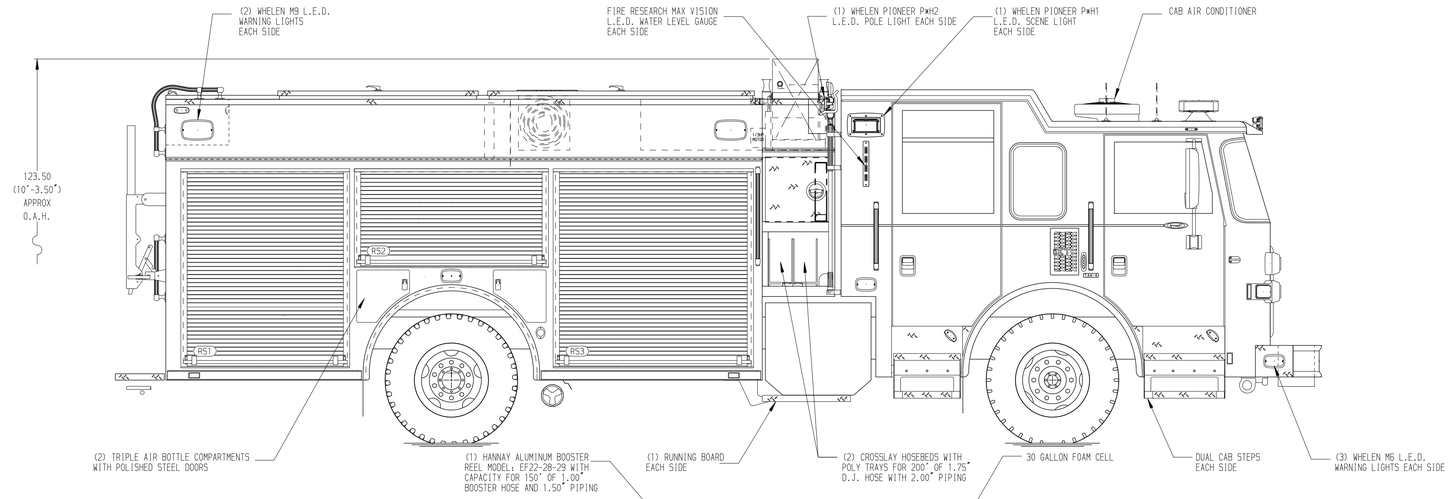

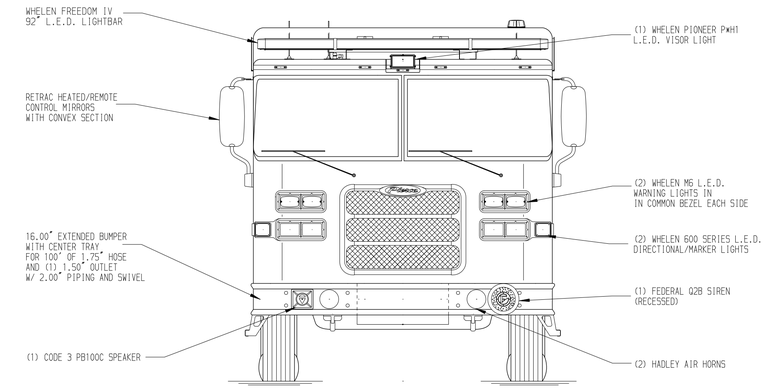

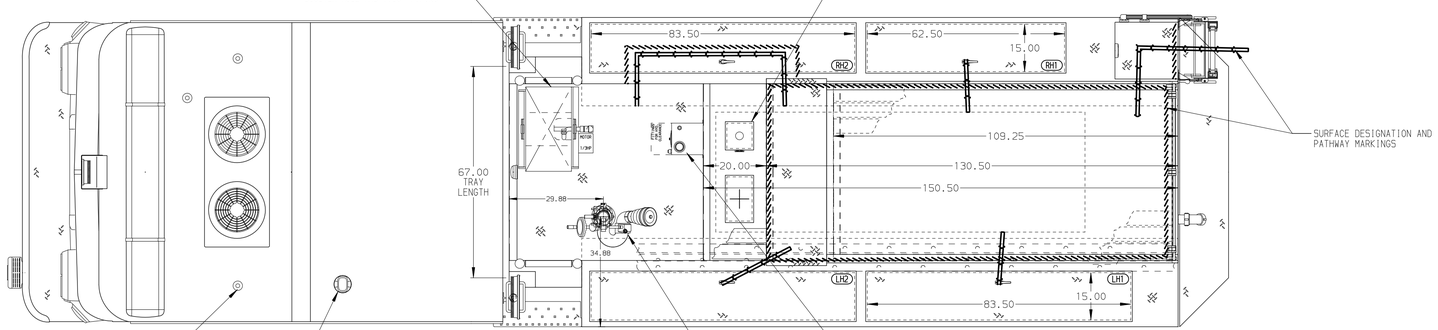

HOSEBED CAPACITIES

1 - 600' OF 2.50" D.J. POLY HOSE
2 - 1000' OF 4.00" D.J. POLY HOSE
3 - 200' OF 2.50" D.J. POLY HOSE

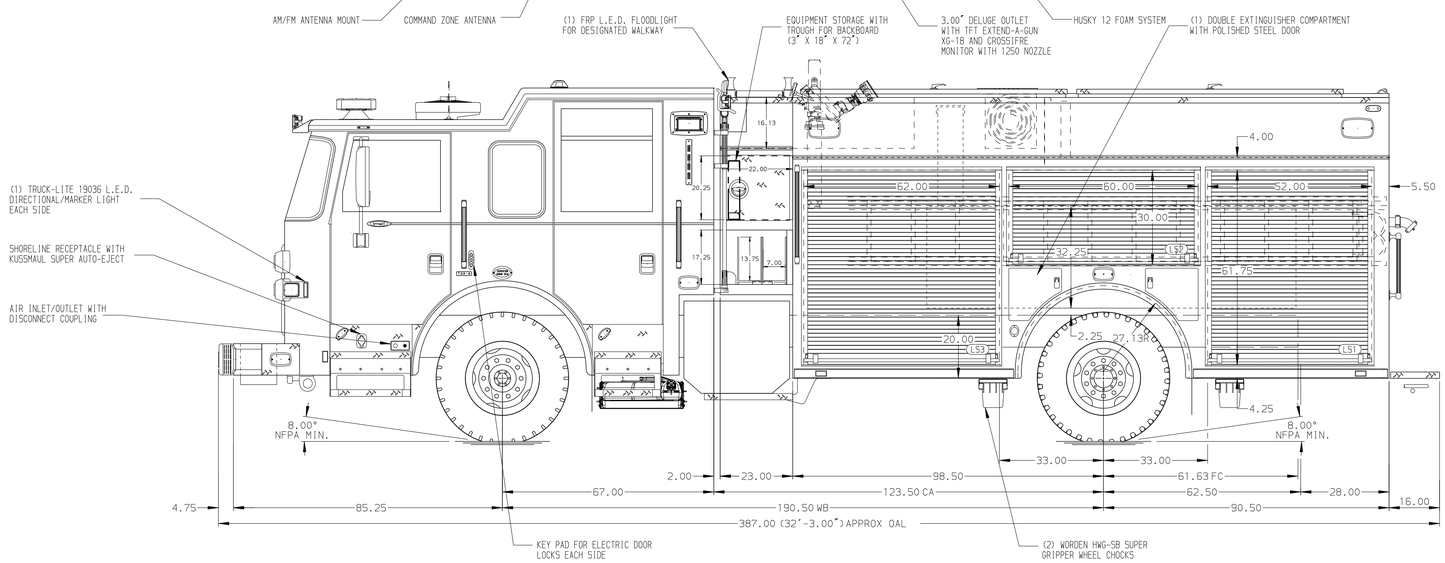

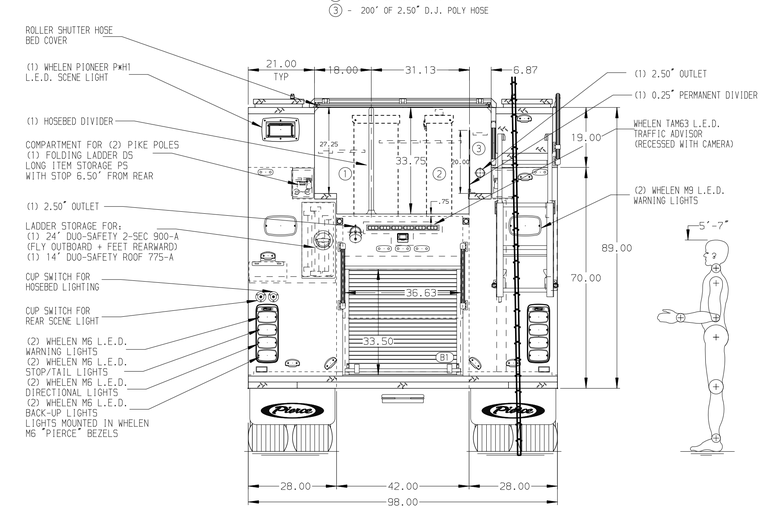

ALUMINUM BODY

NOTE

DIMENSIONS SHOWN ARE APPROXIMATE AND ARE SUBJECT TO MINOR DEVIATIONS AS MAY OCCUR OR BE NECESSARY IN CONSTRUCTION.
MINOR DETAILS NOT SHOWN.

1. DEF TANK MOUNTED UNDER CAB ON THE DRIVER'S SIDE
2. BATTERY CHARGE INDICATOR LOCATED NEAR DRIVER'S SEAT RISER WITH BRACKET
3. KUSSMAUL BATTERY CHARGER LOCATED PER ORDER

REV	DATE	BY	CH
3	02JUL25	JDA	DTJ
2	10JUN25	JDA	DTJ
1	14MAY25	JJB	DTJ
0	19MAR25	JJB	KLH

CHASSIS DATA
MAKE: PIERCE
MODEL: ARROW XT

Pierce MANUFACTURING INC.

TITLE: 1500 GPM, 530G TANK, 500G WATER, 30G FOAM 189" PUC PUMPER, MUX
FOR: IMPERIAL BEACH FIRE DEPARTMENT IMPERIAL BEACH, CALIFORNIA
DWG NO.: 39771AD-SH1

JOB NO.	39771
SCALE 1:24	DATE
DRAWN BY JJB	07MAR25
CHECKED BY KLH	10MAR25
SHEET SIZE D	SHEET NO. 1 OF 2

View File Created 02-JUL-2025 11:48:01