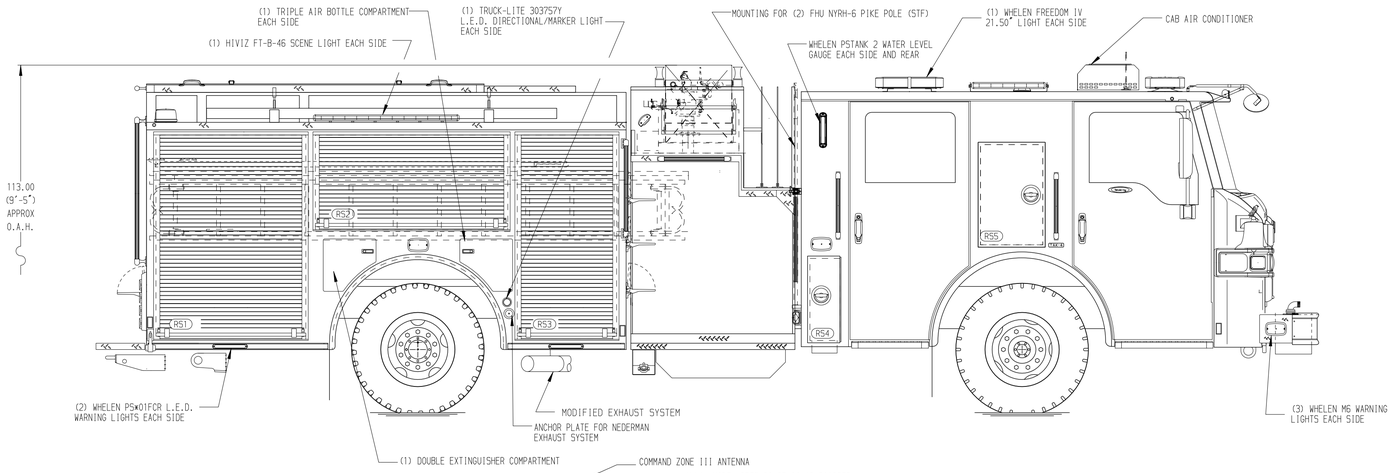

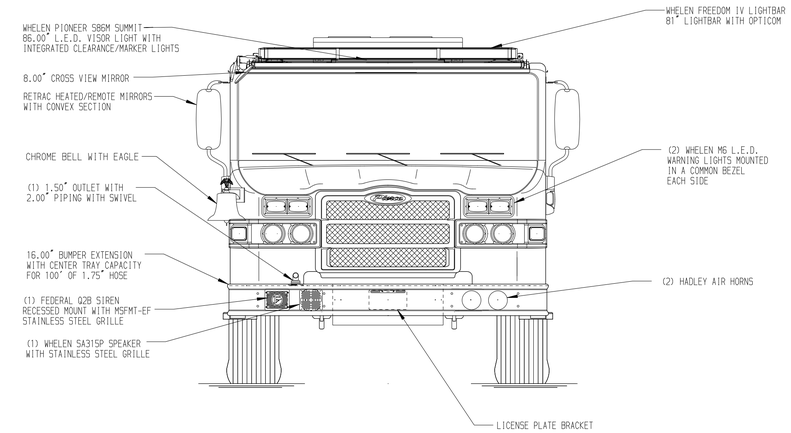

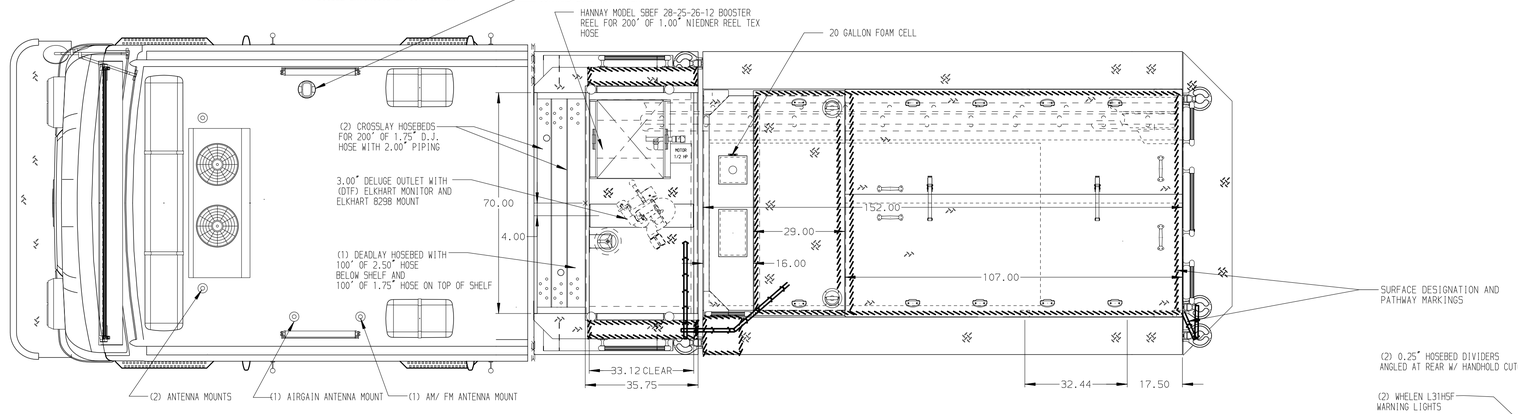

HOSEBED CAPACITIES

1. - 750' OF 5.00" D.J. POLY HOSE
2. - 800' OF 2.50" D.J. POLY HOSE
3. - 200' OF 2.50" D.J. POLY HOSE
4. - 300' OF 1.75" D.J. POLY HOSE

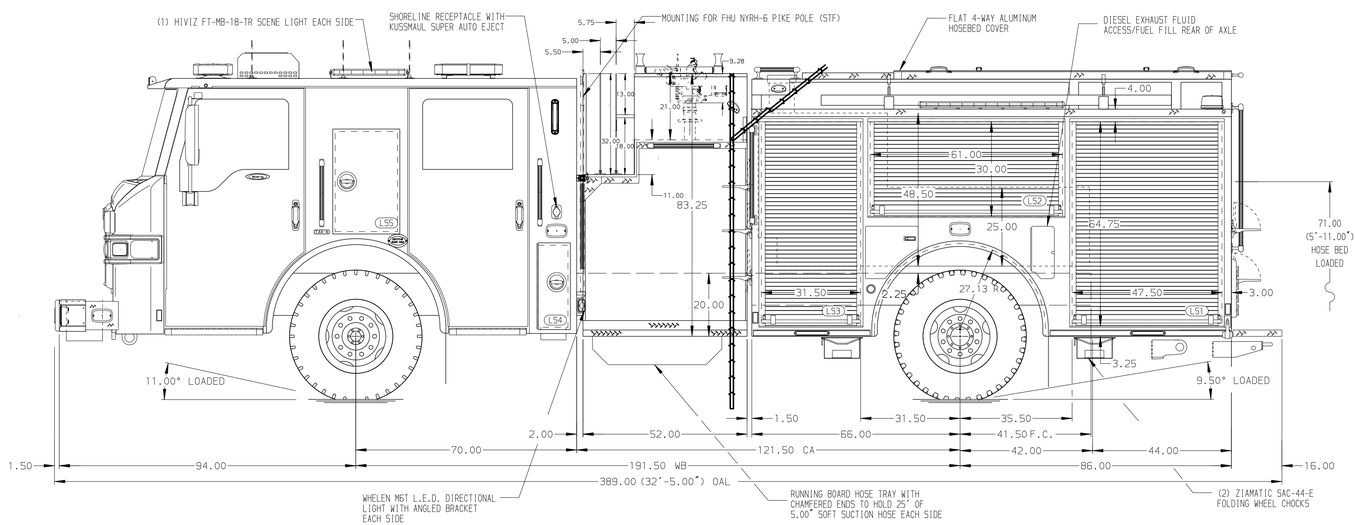

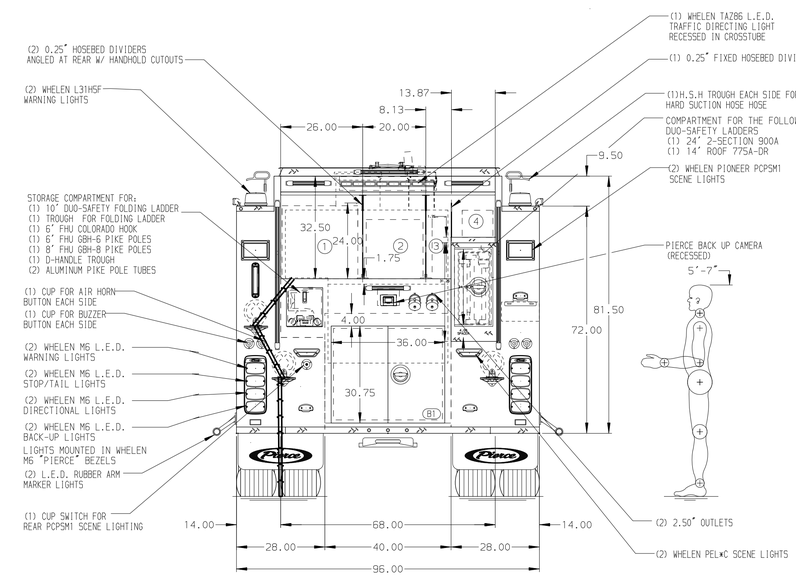

GALVANNEAL BODY | MAXIMUM O.A.L. 389.00" | MAXIMUM O.A.H. 116.00" | SIDE ROLL AND FRONTAL IMPACT PROTECTION

NOTE

DIMENSIONS SHOWN ARE APPROXIMATE AND ARE SUBJECT TO MINOR DEVIATIONS AS MAY OCCUR OR BE NECESSARY IN CONSTRUCTION.
MINOR DETAILS NOT SHOWN.

1. AIR OUTLET W/ SHUT OFF VALVE ON DRIVER'S SIDE PUMP PANEL
2. BATTERY CHARGER AND COMPRESSOR BEHIND THE DRIVER'S SEAT
3. BATTERY CHARGER INDICATOR ON THE DRIVER'S STEP AREA
4. FOAM PRO 2001 FOAM SYSTEM

REV	DATE	BY	CH
3	26AUG25	LST	TDC
2	29JUL25	LST	TDC
1	01MAY25	LST	KLH

CHASSIS DATA
MAKE: PIERCE
MODEL: VELOCITY

Pierce MANUFACTURING INC.

TITLE: 2000 GPM, 520 G TANK, 500 G WATER, 20 G FOAM CELL 152" BODY, VELOCITY ESP ELECTRICAL SYSTEM

FOR: CITY OF WOODLAND WOODLAND, CALIFORNIA

DWG NO.: 39778AD

JOB NO.	39778 01-02
SCALE	1:24
DATE	
DRAWN BY	LST 23APR25
CHECKED BY	KLH 28APR25
SHEET SIZE	D
SHEET NO.	1 OF 1

View File Created 26-AUG-2025 13:22:33