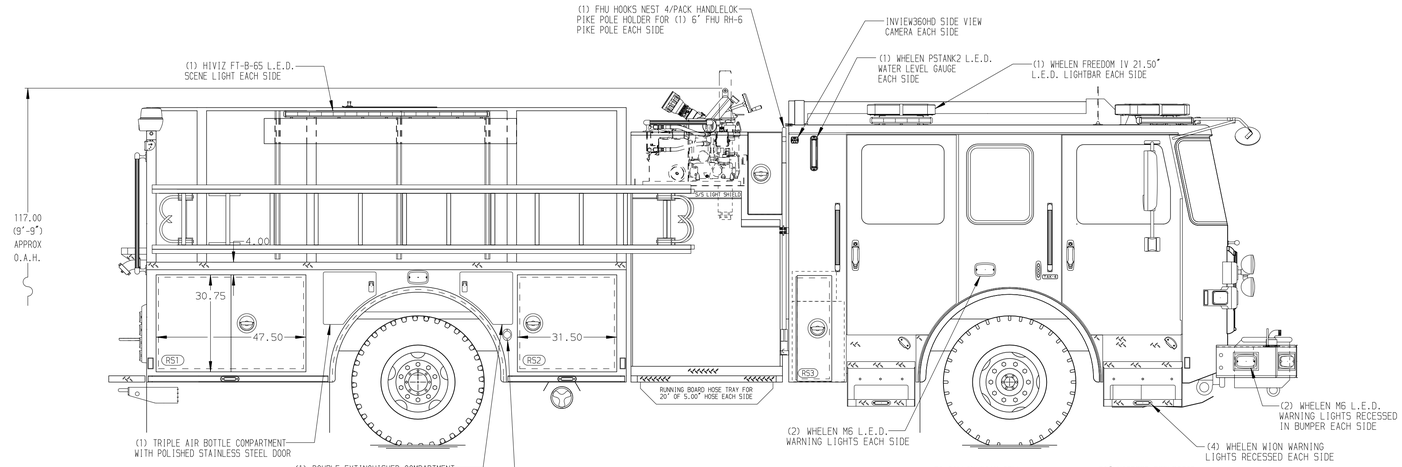

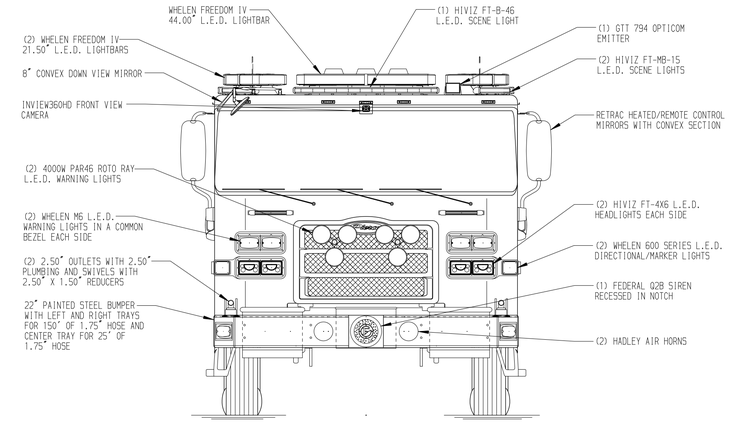

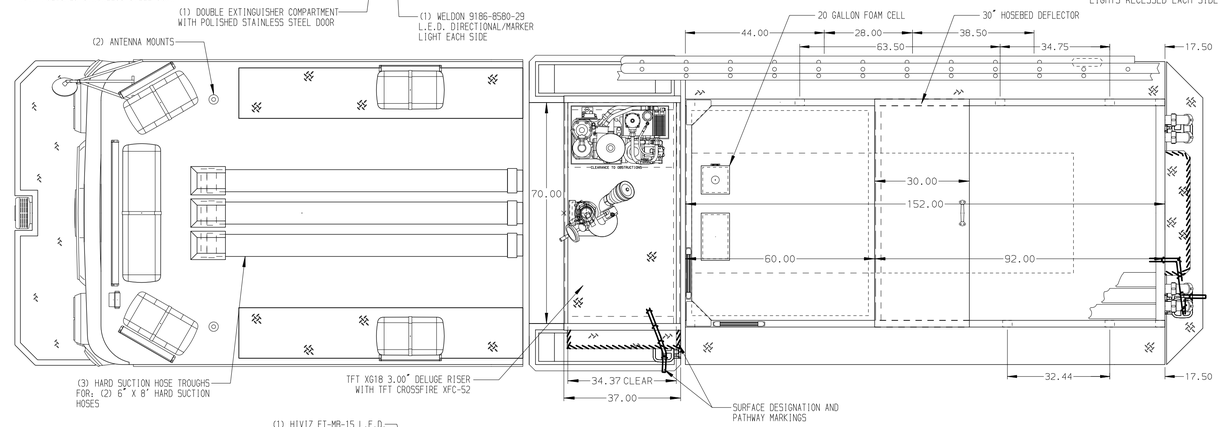

HOSEBED CAPACITIES

1. - 400' OF 2.50" D.J. POLY HOSE
2. - 500' OF 3.00" D.J. POLY HOSE
3. - 1200' OF 5.00" D.J. POLY HOSE
4. - 400' OF 1.75" D.J. POLY HOSE
5. - 250' OF 2.50" D.J. POLY HOSE

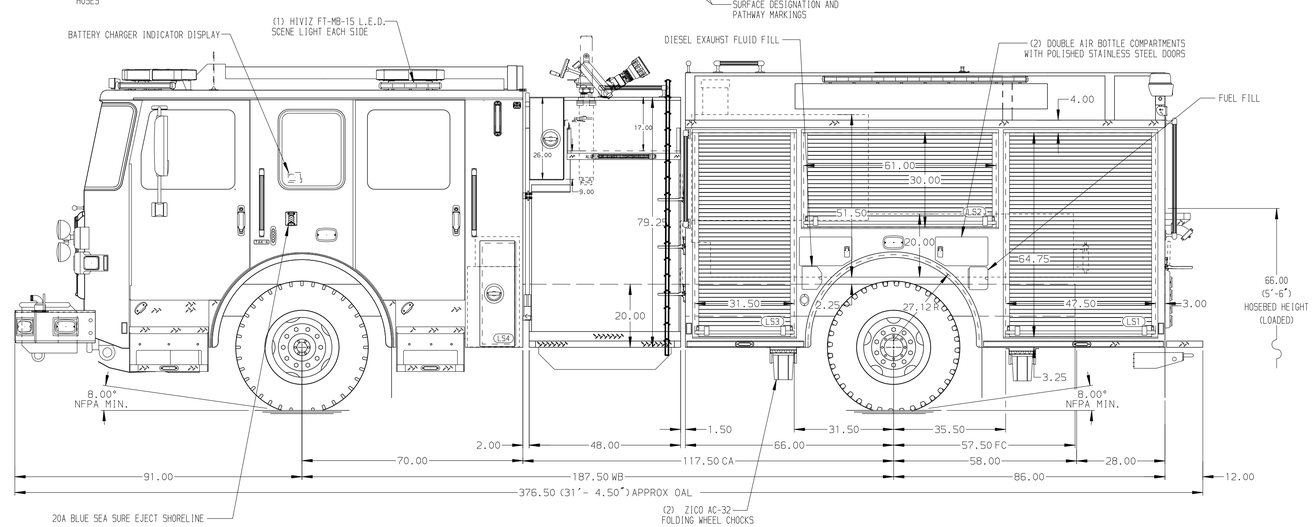

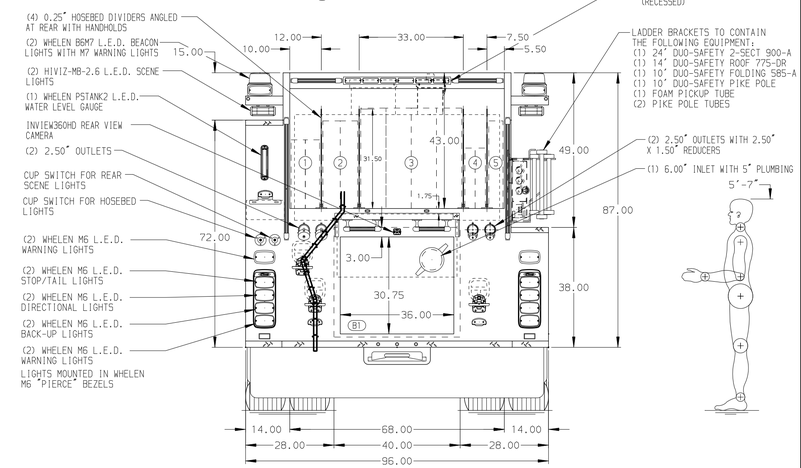

ALUMINUM BODY

SIDE ROLL AND FRONTAL IMPACT PROTECTION

NOTE

DIMENSIONS SHOWN ARE APPROXIMATE AND ARE SUBJECT TO MINOR DEVIATIONS AS MAY OCCUR OR BE NECESSARY IN CONSTRUCTION.
MINOR DETAILS NOT SHOWN.

1. BATTERY CHARGER LOCATED PER ORDER
2. WHELEN SA315P SPEAKER LOCATED BEHIND FRONT BUMPER
3. FOUR ADJUSTABLE SHELVES LOCATED PER ORDER
4. ONE FLOOR MOUNTED SLIDE-OUT TRAYS LOCATED PER ORDER
5. ONE CTECH DRAWER CABINET LOCATED PER ORDER
6. ONE SWING-OUT ALUMINUM TOOLBOARD LOCATED PER ORDER
7. ONE PAC TRAC LOCATED PER ORDER
8. TWO ALUMINUM PEGBOARDS LOCATED PER ORDER
9. TWO ROLLED HOSE STORAGE RACKS LOCATED PER ORDER

REV	DATE	BY	CH
F	11MAR26	JAM	ZWE
E	24NOV25	JAM	CSH
D	08SEP25	JAM	CSH
C	13AUG25	SJM	CSH
B	12AUG25	SJM	CSH

CHASSIS DATA
MAKE: PIERCE
MODEL: ENFORCER

Pierce MANUFACTURING INC.

TITLE: 2000GPM, 750G TANK, 730G WATER, 20G FOAM 152" 2G PUMPER, HARDWIRED
FOR: MARION FIRE & EMS, MARION, VIRGINIA
DWG NO.: 39784AD

JOB NO.	39784
SCALE 1:24	DATE
DRAWN BY SJM	12MAY25
CHECKED BY CDU	12MAY25
SHEET SIZE D	SHEET NO. 1 OF 1

View File Created 11-MAR-2026 09:55:47