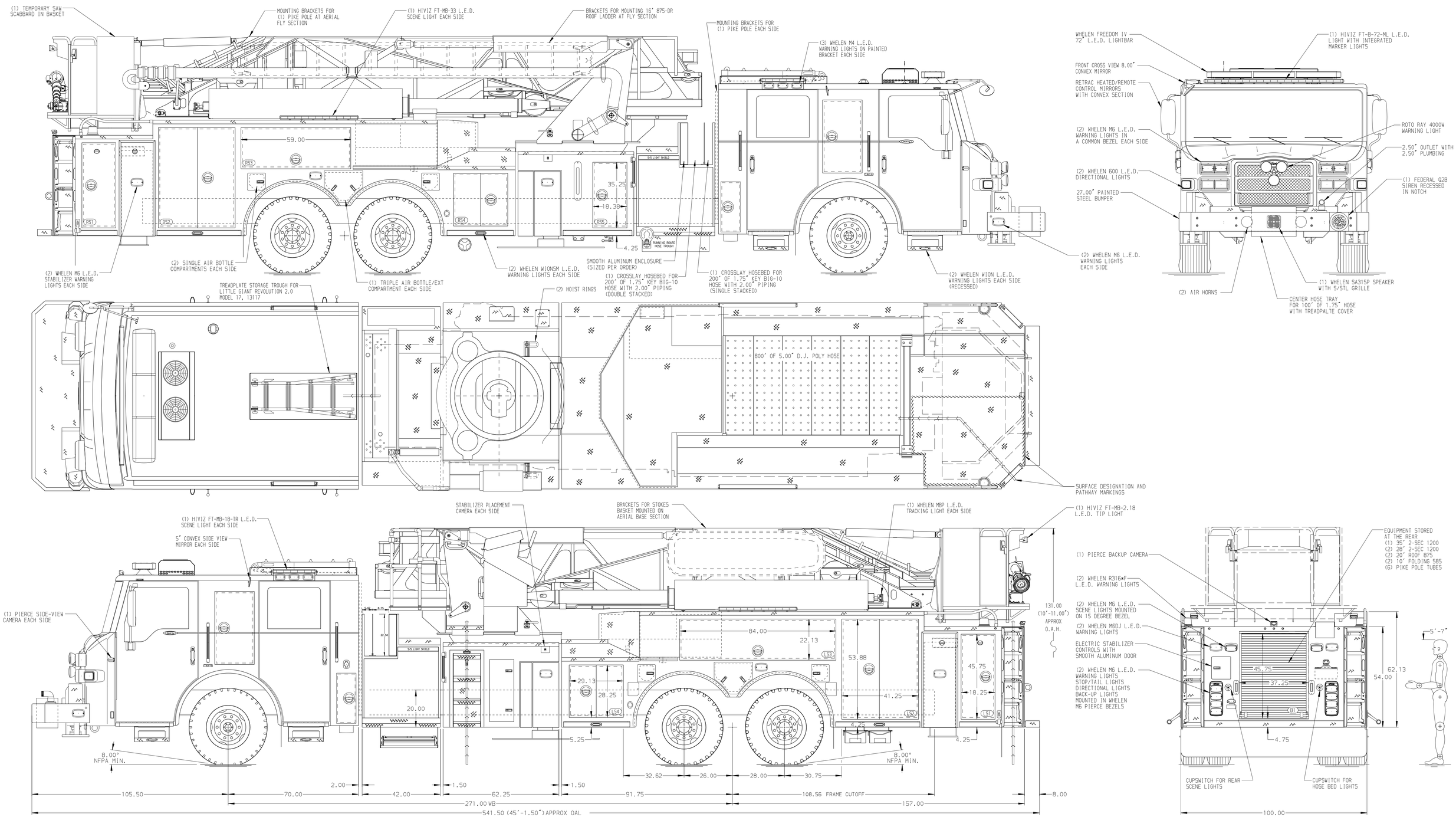

ALUMINUM BODY | SIDE ROLL & FRONTAL IMPACT PROTECTION

NOTE

DIMENSIONS SHOWN ARE APPROXIMATE AND ARE SUBJECT TO MINOR DEVIATIONS AS MAY OCCUR OR BE NECESSARY IN CONSTRUCTION.
MINOR DETAILS NOT SHOWN.

1. SHORELINE RECEPTACLE WITH KUSSMAUL SUPER AUTO-EJECT LOCATED REAR OF CREW CAB DOOR
2. AIR OUTLET WITH SHUTOFF VALVE LOCATED AT DRIVER SIDE PUMP PANEL
3. BATTERY CHARGER LOCATED PER ORDER
4. BATTERY CHARGE INDICATOR LOCATED PER ORDER
5. TWO ADJUSTABLE SHELVES LOCATED IN COMPARTMENTS PER ORDER
6. ONE FLOOR MOUNTED SLIDE-OUT TRAY LOCATED IN COMPARTMENT PER ORDER
7. ONE CTECH TWO-DRAWER CABINET LOCATED IN COMPARTMENT PER ORDER
8. ONE SLIDE-OUT TOOLBOARD LOCATED IN COMPARTMENT PER ORDER
9. DC POWER TO AERIAL TIP
10. 3-in-1 LYFECOMBO BRACKETS AT AERIAL BASKET
11. ONE SWING-OUT TOOLBOARD LOCATED IN COMPARTMENT PER ORDER
12. ONE ADJUSTABLE VERTICAL PARTITION LOCATED IN COMPARTMENT PER ORDER
13. THREE RECEPTACLES LOCATED PER ORDER
14. ONE SIDE-WALL MOUNTED PEGBOARD LOCATED IN COMPARTMENT PER ORDER
15. ONE ADJUSTABLE SHELF PLATE LOCATED IN COMPARTMENT PER ORDER
16. WIRELESS CAMERA SYSTEM AT AERIAL BASKET
17. TETHERED MONITOR REMOTE CONTROL
18. TWO HIVIZ FT-MB-9 L.E.D. LIGHTS UNDER BASKET
19. TECNIQ 5-SECTION RUNG LIGHTING AT AERIAL DEVICE

REV	DATE	BY	CH
V	02JUN25	ANZ	JGO
V	23APR25	ANZ	JGO

CHASSIS DATA
MAKE: PIERCE
MODEL: VELOCITY

Pierce MANUFACTURING INC.

TITLE: 100' ASCENDANT AERIAL TOWER AND BODY ASSEMBLY
300 GALLON WATER TANK
FOR: MINT HILL FIRE DEPARTMENT
MINT HILL, NC
DWG NO.: 39785AD

JOB NO.	39785
SCALE 1:24	DATE
DRAWN BY ANZ	10FEB25
CHECKED BY BYO	14FEB25
SHEET SIZE D	SHEET NO. 1 OF 1

View File Created 02-JUN-2025 14:25:10