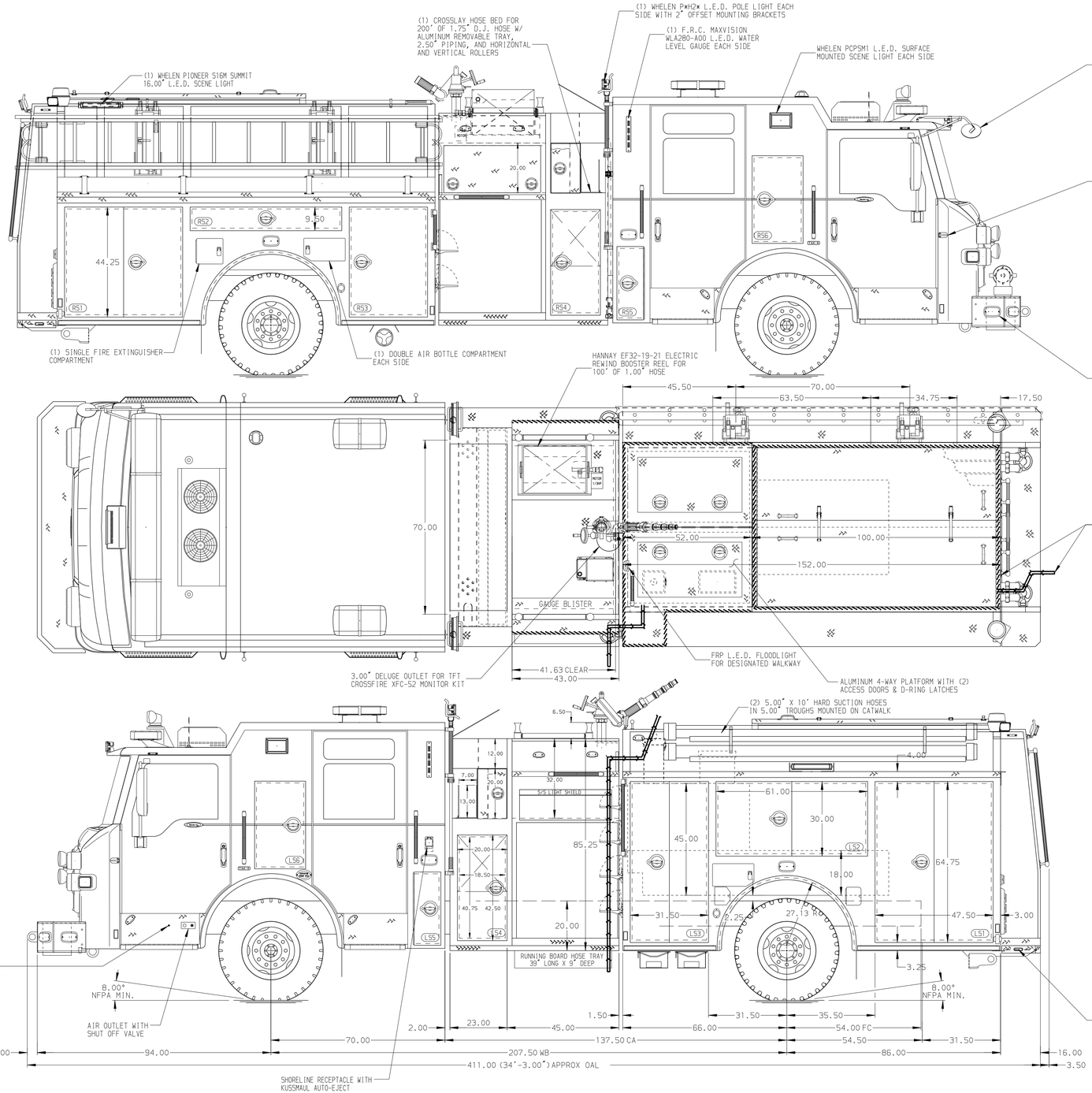

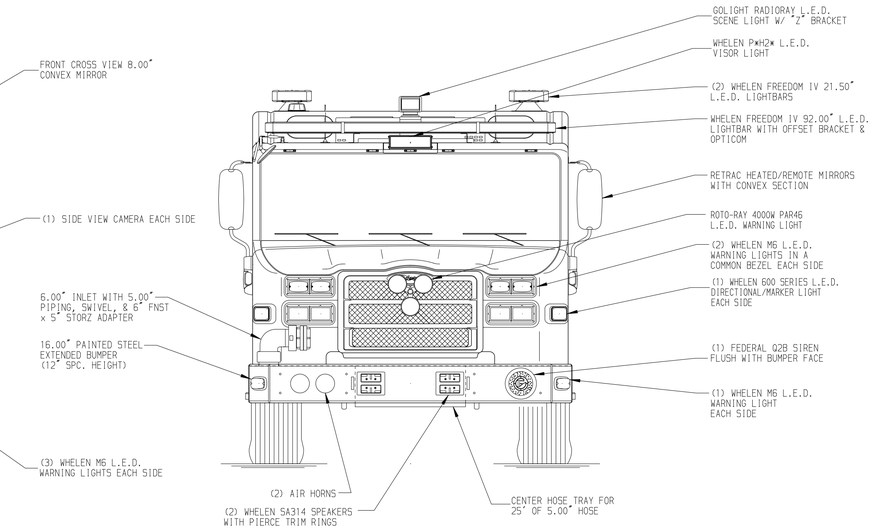

HOSEBED CAPACITIES

1. - 200' OF 1.75" D.J. HOSE
2. - 150' OF 1.75" D.J. HOSE (ABOVE)
   - 600' OF 2.50" D.J. HOSE (BELOW)
3. - 1000' OF 5.00" D.J. HOSE
4. - 200' OF 2.50" D.J. HOSE
5. - 200' OF 1.75" D.J. HOSE

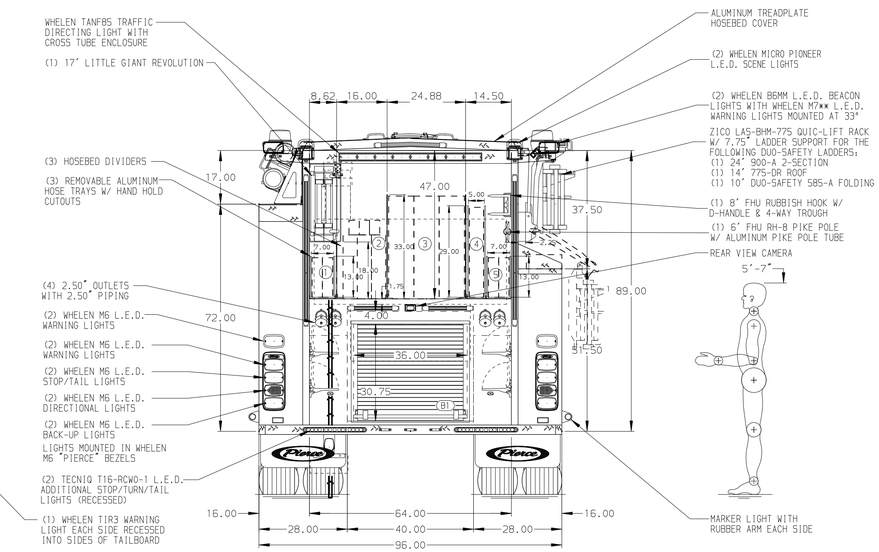

ALUMINUM BODY | MAXIMUM O.A.H. 128.00" | SIDE ROLL & FRONTAL IMPACT PROTECTION | REF 32374

NOTE

DIMENSIONS SHOWN ARE APPROXIMATE AND ARE SUBJECT TO MINOR DEVIATIONS AS MAY OCCUR OR BE NECESSARY IN CONSTRUCTION.
MINOR DETAILS NOT SHOWN.

1. BATTERY CHARGER LOCATED BEHIND THE DRIVER SEAT
2. BATTERY CHARGER INDICATOR LOCATED ON DRIVER'S SEAT WITH BRACKET

REV	DATE	BY	CH
D	26JAN26	PHA	PHA
C	28JUL25	JAM	PHA
B	30MAY25	JAM	PHA
A	14MAR25	JAM	PHA

CHASSIS DATA — MAKE: PIERCE — MODEL: VELOCITY FR

Pierce MANUFACTURING INC.

TITLE: 1750 GPM, 540G TANK, 500G WATER, 40G FOAM 152" 2G PUMPER, MUX

FOR: CASTLE ROCK FIRE DEPARTMENT, CASTLE ROCK, COLORADO

DWG NO.: 39791AD

JOB NO.	SCALE	DRAWN BY	CHECKED BY	SHEET SIZE	SHEET NO.
39791	1:24	JAM	PHA	D	1 OF 1

DATE: 26FEB25 — DATE: 28FEB25

View File Created 26-JAN-2026 14:46:37