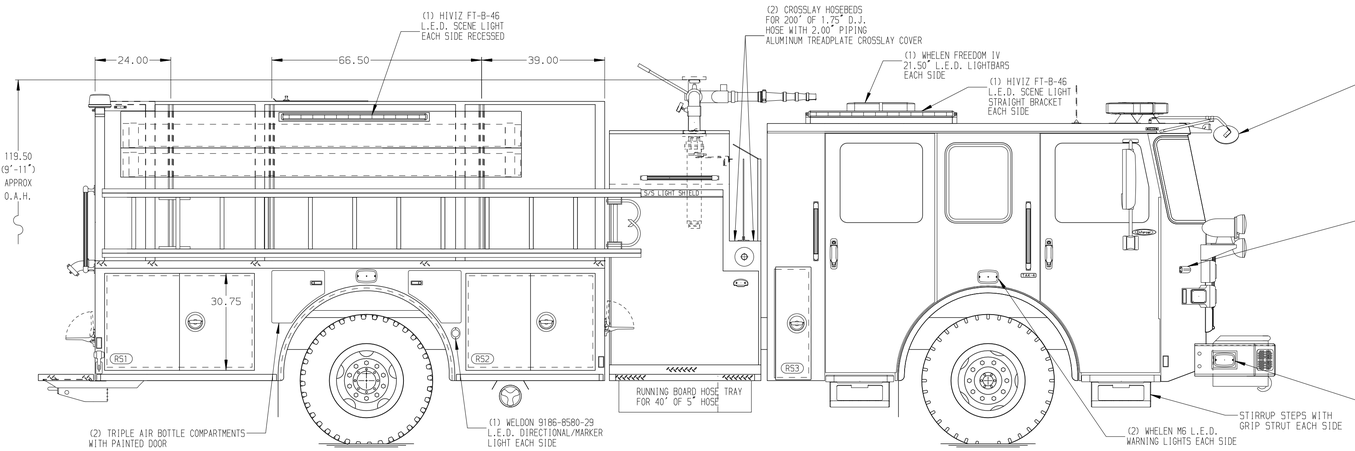

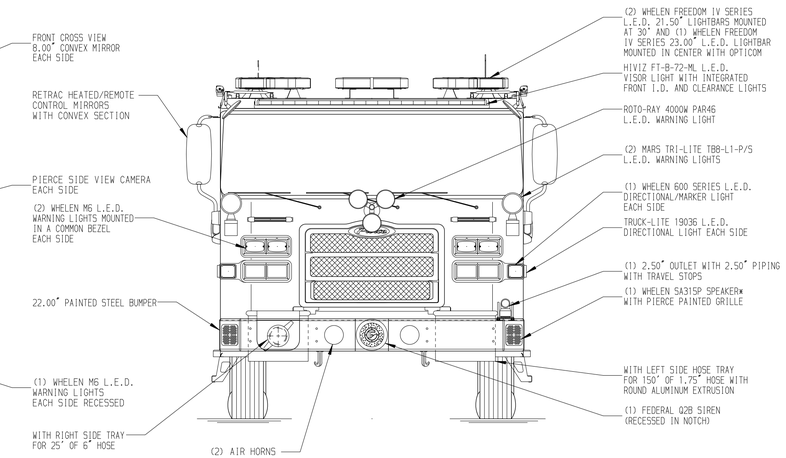

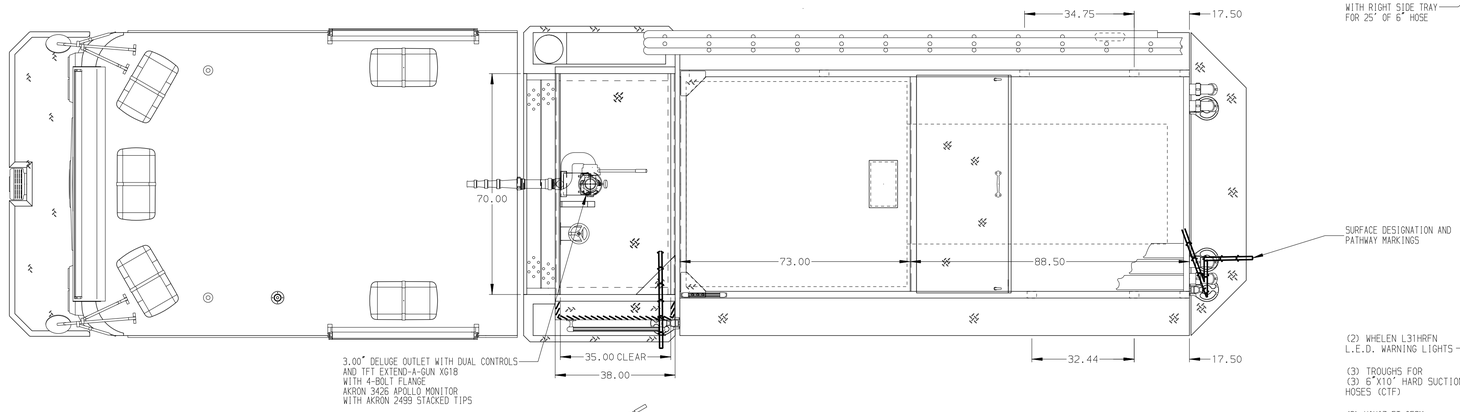

HOSEBED CAPACITIES

1. 200' OF 1.75" MERCEDES AQUAFLOW HOSE
2. 300' OF 1.75" MERCEDES AQUAFLOW HOSE
3. 1000' OF 3.00" MERCEDES AQUAFLOW HOSE
4. 1500' OF 4.00" MERCEDES MEGAFLOW HOSE
5. 400' OF 1.75" MERCEDES AQUAFLOW HOSE
6. 200' OF 1.75" MERCEDES AQUAFLOW HOSE

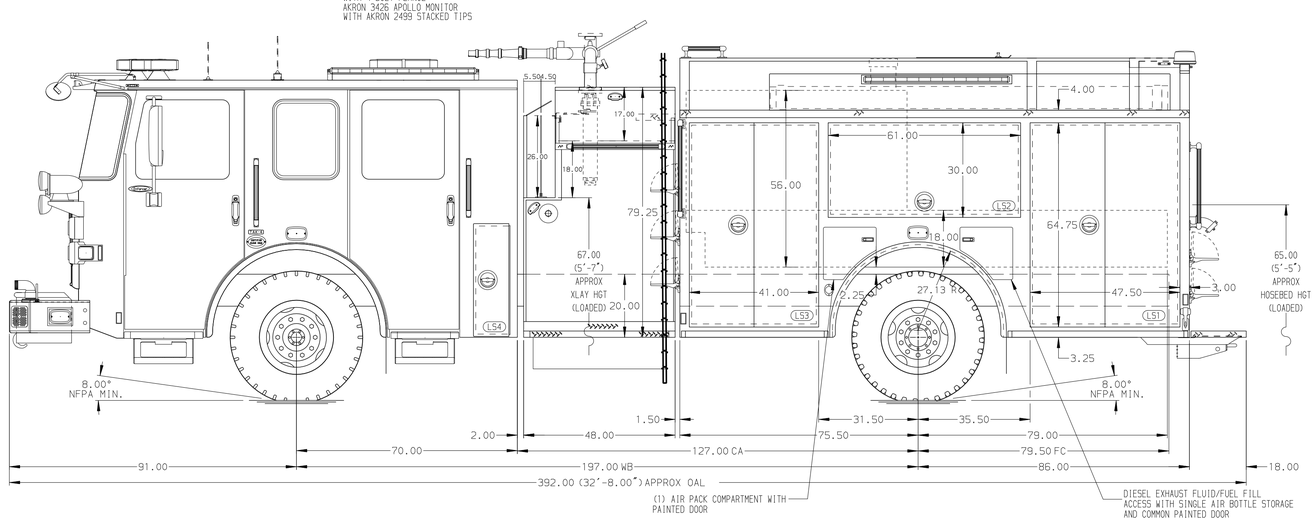

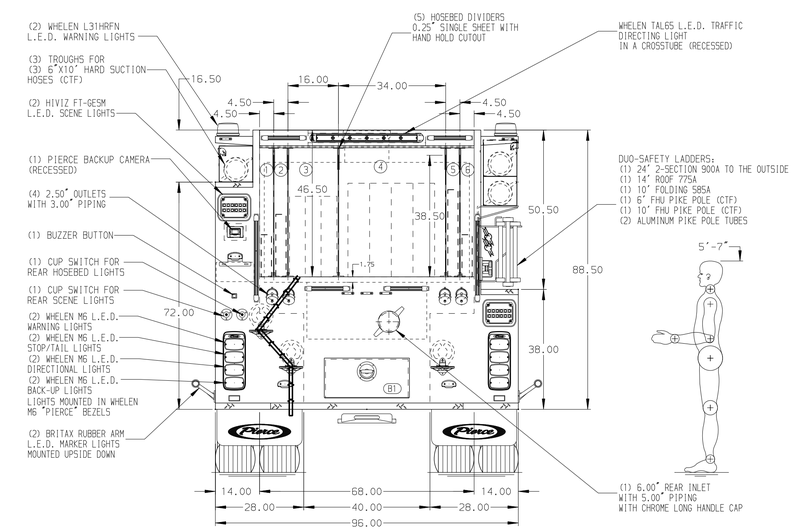

ALUMINUM BODY | MAXIMUM O.A.L.392" | MAXIMUM O.A.H.119.5" | SIDE ROLL AND FRONTAL IMPACT PROTECTION

NOTE

DIMENSIONS SHOWN ARE APPROXIMATE AND ARE SUBJECT TO MINOR DEVIATIONS AS MAY OCCUR OR BE NECESSARY IN CONSTRUCTION.
MINOR DETAILS NOT SHOWN.

1. BATTERY CHARGER LOCATED BEHIND DRIVER'S SEAT
2. BATTERY CHARGE INDICATOR LOCATED NEAR DRIVER'S SEAT RISER WITH BRACKET
3. DUAL L.E.D. LIGHT STRIPS LOCATED IN HOSE BED
4. L.E.D. LIGHT STRIP LOCATED ON THE FRONT OF THE HOSEBED
5. WORDEN WHEEL CHOCKS SHIPPED LOOSE
6. AIR INLET LOCATED IN DRIVER'S STEP WELL
7. KUSSMAUL SHORELINE LOCATED IN DRIVER'S STEP WELL

REV	DATE	BY	CH
7	16SEP25	JAM	COS
6	14AUG25	JAM	COS
5	15MAY25	JAM	CDU

CHASSIS DATA
MAKE: PIERCE
MODEL: ENFORCER

Pierce MANUFACTURING INC.

TITLE: 1500 GPM, 1000 GALLON WATER TANK
161" 2G PUMPER, HARD WIRED

FOR: ALLIANCE FIRE & RESCUE SERVICES
RED LION, PENNSYLVANIA

DWG NO.: 39792AD

JOB NO.	39792
SCALE	1:24
DATE	
DRAWN BY	JAM 07MAY25
CHECKED BY	CDU 8MAY25
SHEET SIZE	D
SHEET NO.	1 OF 1

View File Created 17-SEP-2025 09:49:46