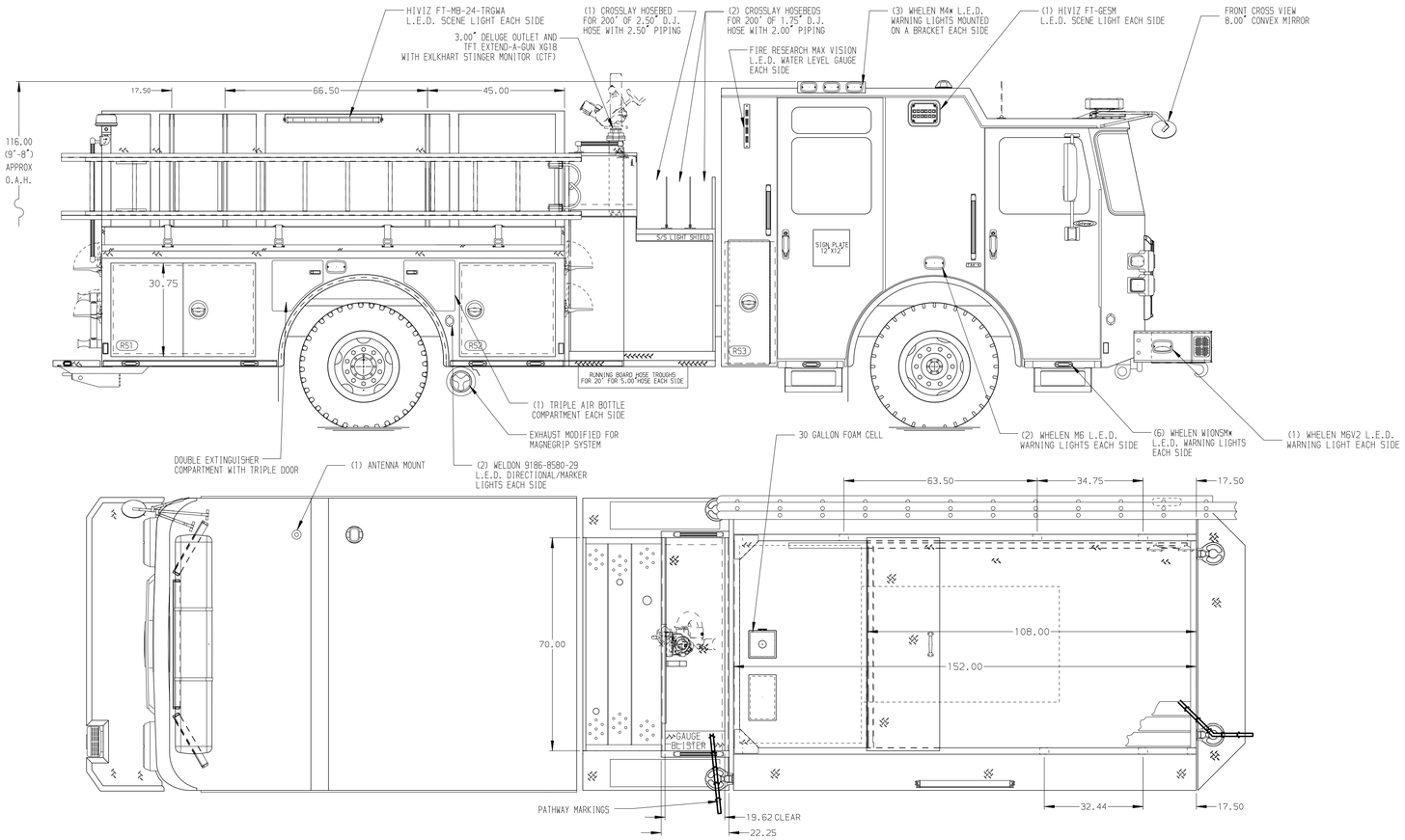

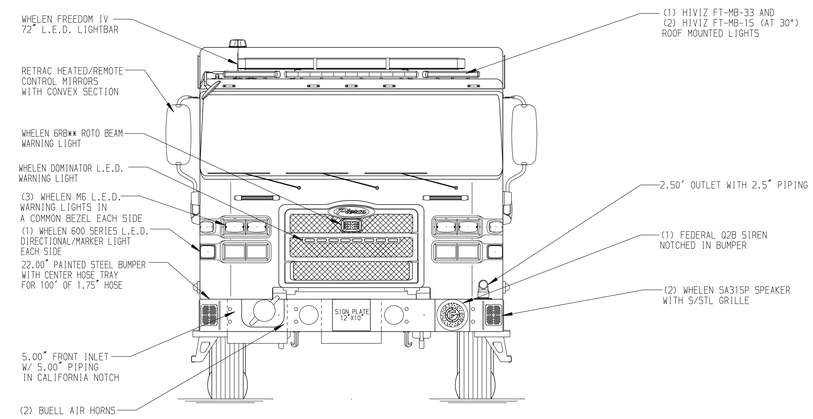

HOSEBED CAPACITIES

1. 200' OF 1.75" D.J. POLY HOSE
2. 200' OF 1.75" D.J. POLY HOSE
3. 400' OF 2.50" D.J. POLY HOSE
4. 1000' OF 5.00" D.J. POLY HOSE

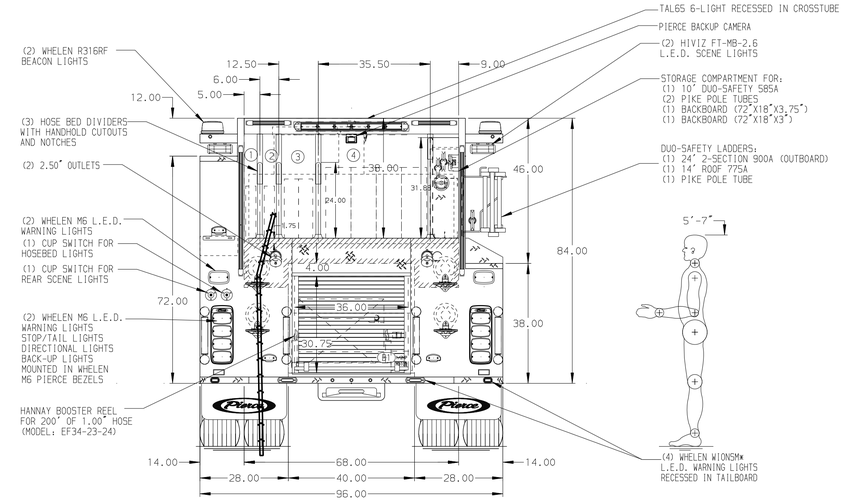

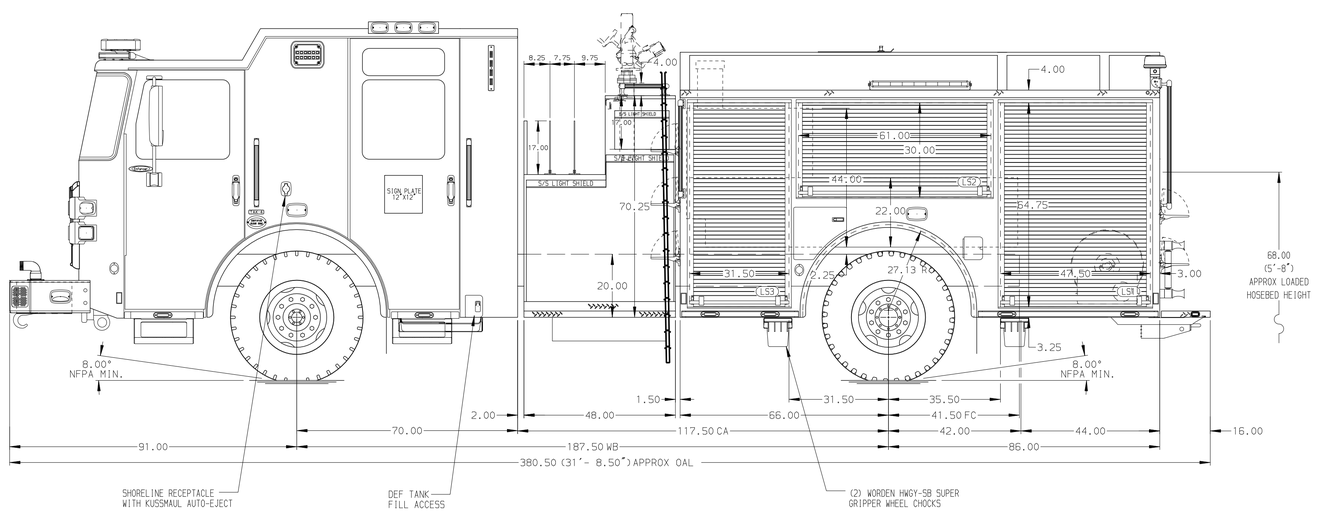

ALUMINUM BODY

NOTE

DIMENSIONS SHOWN ARE APPROXIMATE AND ARE SUBJECT TO MINOR DEVIATIONS AS MAY OCCUR OR BE NECESSARY IN CONSTRUCTION.
MINOR DETAILS NOT SHOWN.

1. AIR INLET WITH DISCONNECT COUPLING IN THE DRIVER SIDE FORWARD STEPWELL
2. AIR OUTLET WITH SHUT-OFF VALVE ON DRIVER SIDE PUMP PANEL
3. BATTERY CHARGER/CONVERTER, PROGRESSIVE DYNAMICS PD2180, LOCATED BEHIND DRIVERS SEAT

REV	DATE	BY	CH
V	01OCT25	KLE	ZWE
V	02JUL25	KLE	ZWE
V	12JUN25	JER	ZWE
V	09APR25	JER	ZWE
V	24MAR25	KLE	ZWE

CHASSIS DATA
MAKE: PIERCE
MODEL: ENFORCER

Pierce MANUFACTURING INC.

TITLE: 2000 GPM, 530G TANK, 500G WATER, 30G FOAM 152" PUMPER, MUX
FOR: ALPHARETTA FIRE DEPARTMENT ALPHARETTA, GEORGIA
DWG NO.: 39807AD

JOB NO.	39807
SCALE 1:24	DATE
DRAWN BY KLE	08JAN25
CHECKED BY KLH	09JAN25
SHEET SIZE D	SHEET NO. 1 OF 1

View File Created 01-OCT-2025 12:40:20