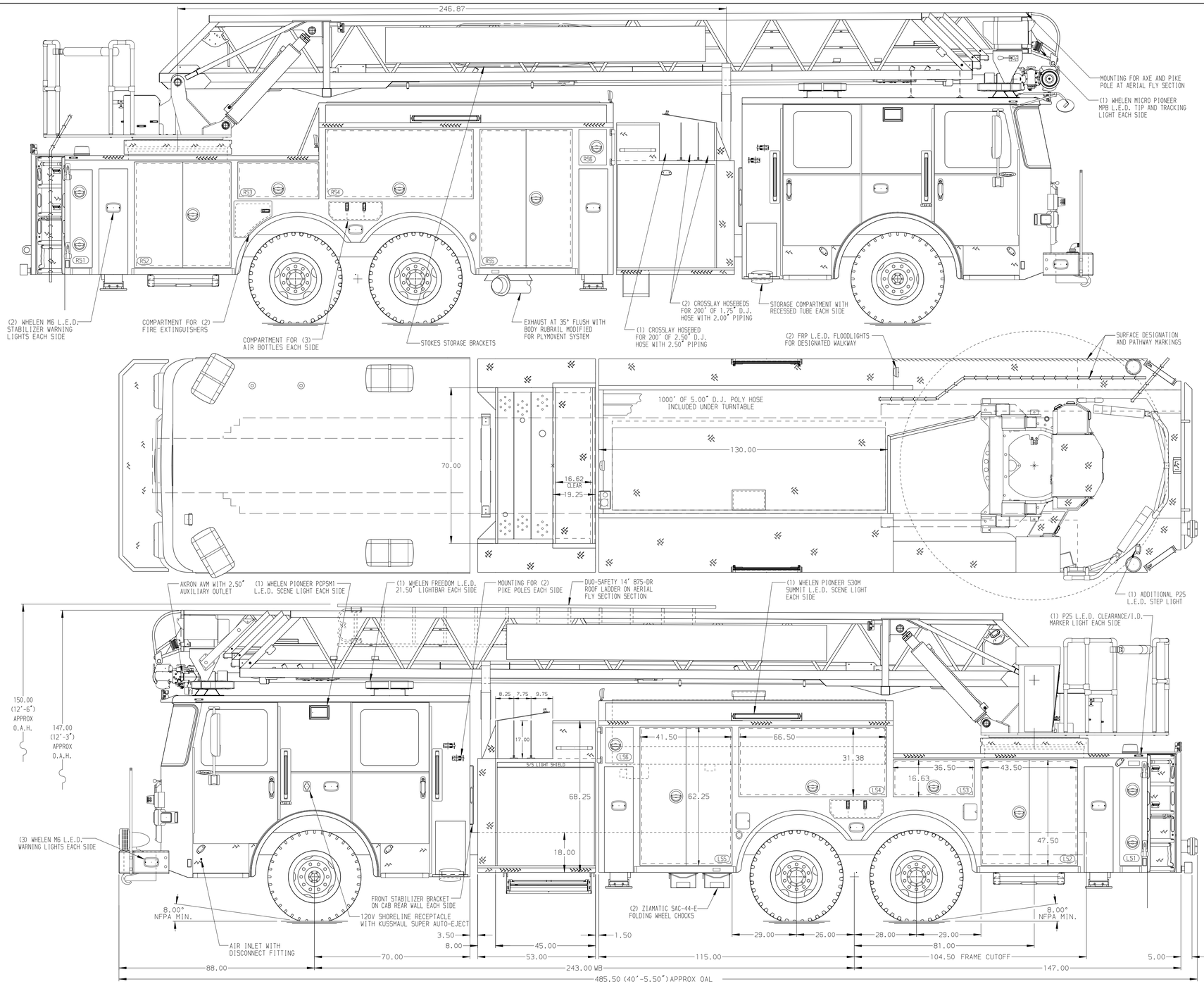

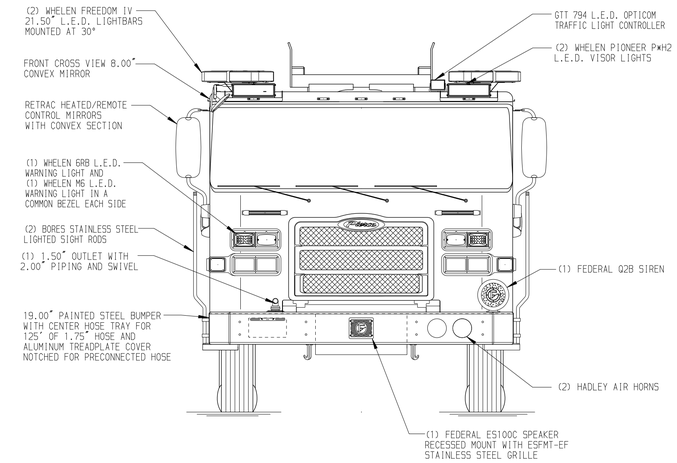

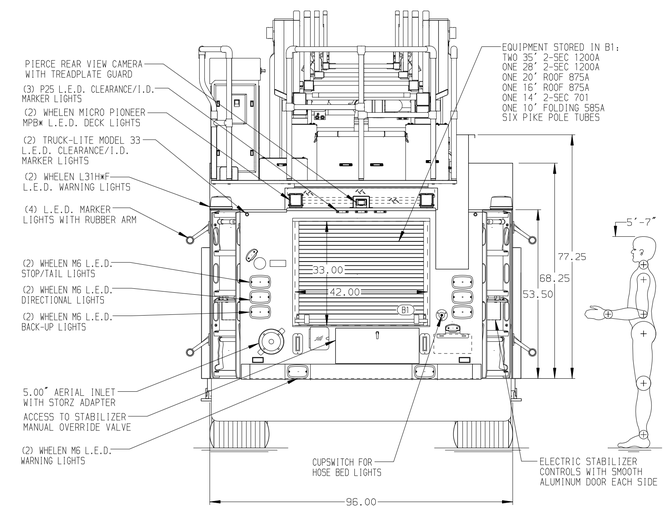

ALUMINUM BODY

FRONTAL IMPACT PROTECTION

NOTE

DIMENSIONS SHOWN ARE APPROXIMATE AND ARE SUBJECT TO MINOR DEVIATIONS AS MAY OCCUR OR BE NECESSARY IN CONSTRUCTION.
MINOR DETAILS NOT SHOWN.

1. TWO TILT/SLIDE-OUT TRAYS PER ORDER
2. THREE 120V DUPLEX RECEPTACLE LOCATED IN COMPARTMENTS PER ORDER
3. ONE 120V 6-PLACE RECEPTACLE STRIP LOCATED IN CAB PER ORDER
4. BATTERY CHARGER LOCATED IN COMPARTMENT PER ORDER
5. BATTERY CHARGER INDICATOR LOCATED PER ORDER
6. FIVE ADJUSTABLE FULL WIDTH/FULL DEPTH SHELVES LOCATED PER ORDER
7. TWO FLOOR MOUNTED SLIDE-OUT TRAYS LOCATED PER ORDER
8. ONE SWING-OUT TOOL BOARD WITH PEGBOARD PATTERN LOCATED PER ORDER
7. ONE SLIDE-OUT TRAY PER ORDER
10. L.E.D. LIGHT STRIPS LOCATED IN HOSE BED PER ORDER
11. L.E.D. LIGHTING ON AERIAL LADDER SECTIONS
12. TRIDENT FOLDING STEPS ON AERIAL DEVICE
13. 2-WAY INTERCOM SYSTEM BETWEEN AERIAL TIP AND TURNTABLE
14. LIFTING EYE ROPE RESCUE ATTACHMENT AT AERIAL TIP
15. AERIAL PEDESTAL RAISED 3.00"
16. NO LIMITED RETRACTION
17. TURNTABLE SHORTENED RIGHT SIDE
18. OSHKOSH TAK-4 T3 REAR STEER

REV	DATE	BY	CH
V	15JAN26	SHU	CSH
V	21NOV25	SHU	CSH
V	28AUG25	SHU	CSH
V	26JUN25	LWE	CSH

CHASSIS DATA
MAKE: PIERCE
MODEL: ENFORCER

Pierce MANUFACTURING INC.

TITLE: 100' HSL AERIAL LADDER AND BODY ASSEMBLY 500 GALLON WATER TANK
FOR: WOBURN FIRE DEPARTMENT WOBURN, MA
DWG NO.: 39814AD

JOB NO.	39814
SCALE	1:24
DATE	
DRAWN BY	SHU 31MAR25
CHECKED BY	BYO 07APR25
SHEET SIZE	D
SHEET NO.	1 OF 1

View File Created 15-JAN-2026 07:41:25