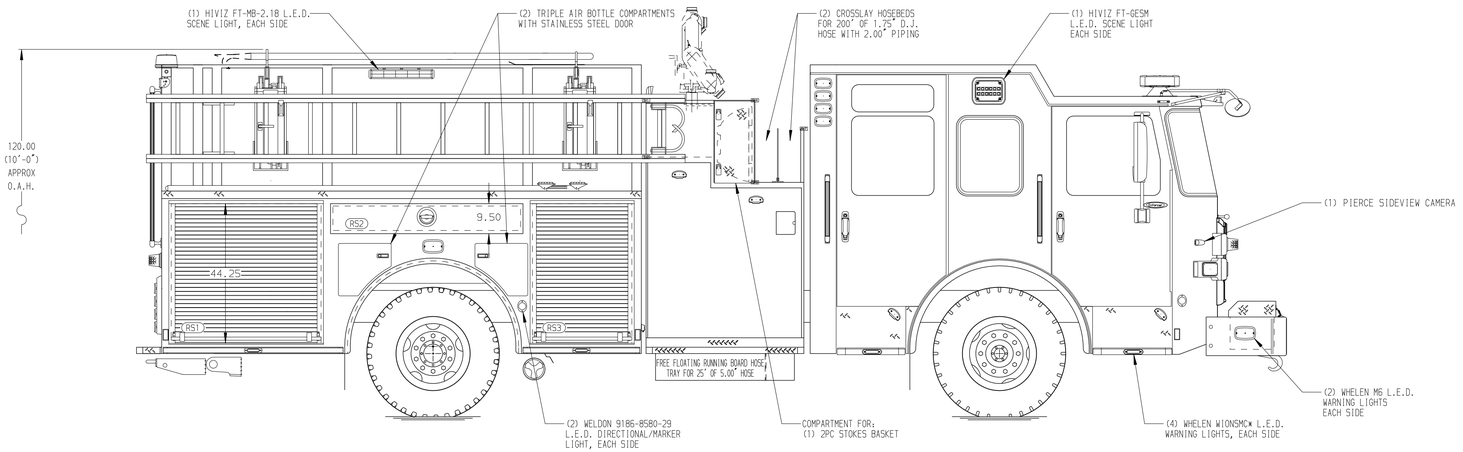

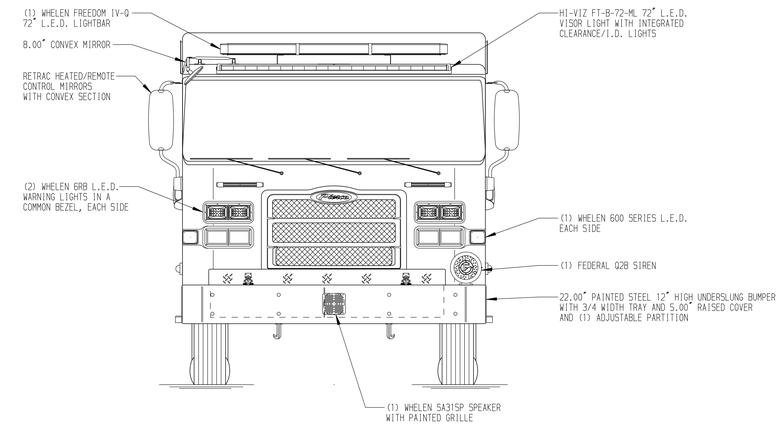

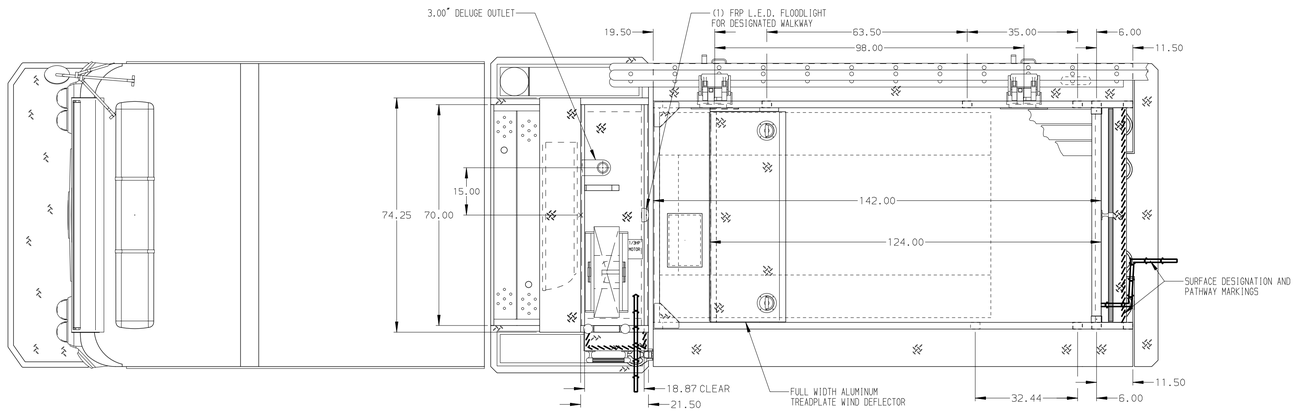

HOSEBED CAPACITIES

1. 300' OF 2.50" BIG-10 KEY HOSE
2. 200' OF 2.50" BIG-10 KEY HOSE
3. 1200' OF 5.00" PRO-FLOW KEY HOSE
4. 200' OF 2.50" BIG-10 KEY HOSE
5. 300' OF 2.50" BIG-10 KEY HOSE

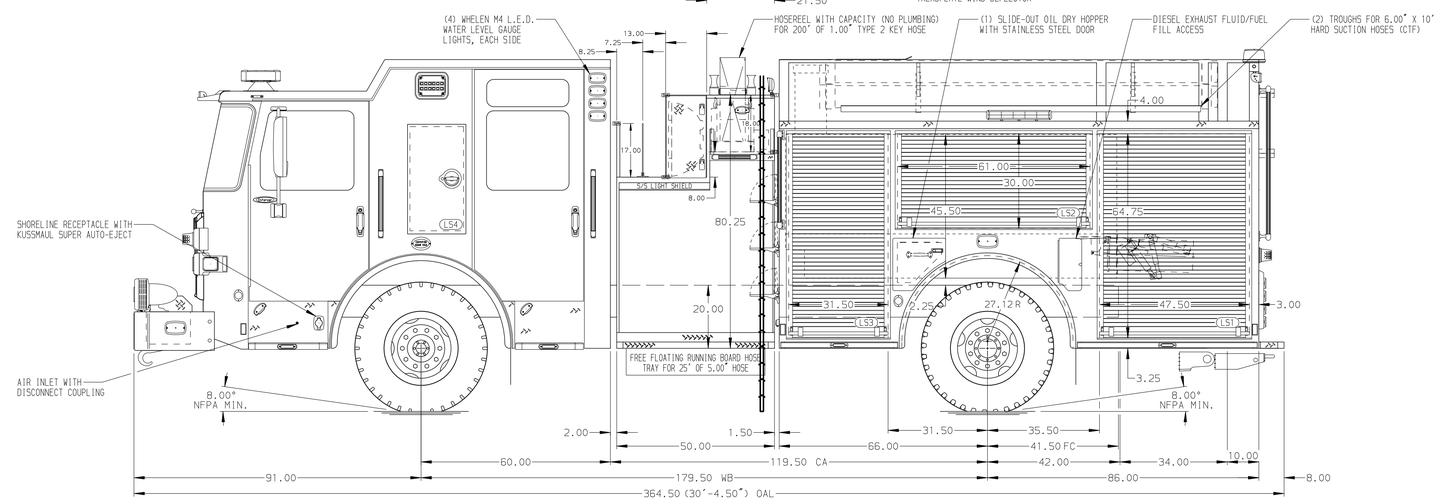

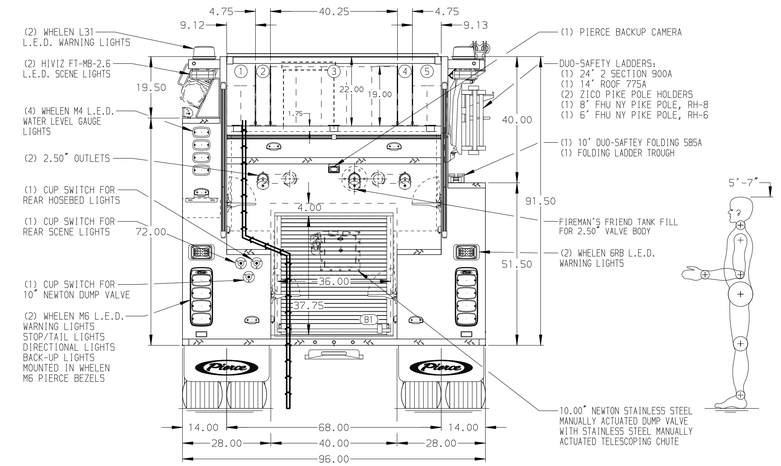

ALUMINUM BODY

SIDE ROLL AND FRONTAL IMPACT PROTECTION

NOTE

DIMENSIONS SHOWN ARE APPROXIMATE AND ARE SUBJECT TO MINOR DEVIATIONS AS MAY OCCUR OR BE NECESSARY IN CONSTRUCTION.
MINOR DETAILS NOT SHOWN.

1. DUAL L.E.D. LIGHT STRIPS LOCATED IN HOSE BED
2. BATTERY CHARGER LOCATED PER ORDER
3. BATTERY CHARGER INDICATOR LOCATED ON DRIVER'S SEAT RISER
4. WHEEL CHOCKS AND MOUNTING BRACKETS TO BE PROVIDED BY FIRE DEPARTMENT
5. ONE 1.50" OUTLET WITH 2.00" PIPING AND SWIVEL LOCATED IN UNDERSLUNG BUMPER TRAY
6. ONE MODEL KLEINN 730 "TRAINHORN" TO BE INSTALLED UNDER RS FRONT STEPWELL
7. AIR OUTLET WITH SHUT OFF VALVE LOCATED ON THE DRIVER'S SIDE PUMP PANEL

REV	DATE	BY	CH
3	08SEP25	JDA	TDC
2	27MAY25	JDA	TDC
1	24APR25	JDA	TDC

CHASSIS DATA
MAKE: PIERCE
MODEL: ENFORCER

Pierce MANUFACTURING INC.

TITLE: 2000GPM, 1000G WATERTANK 152" PUMPER, HARDWIRED
FOR: GRACE CHAPEL VOLUNTEER FIRE DEPARTMENT GRANITE FALLS, NORTH CAROLINA
DWG NO.: 39818AD

JOB NO.	39818
SCALE	1:24
DATE	
DRAWN BY	JDA 18FEB25
CHECKED BY	CDU 19FEB25
SHEET SIZE	D
SHEET NO.	1 OF 1

View File Created 10-SEP-2025 12:47:01