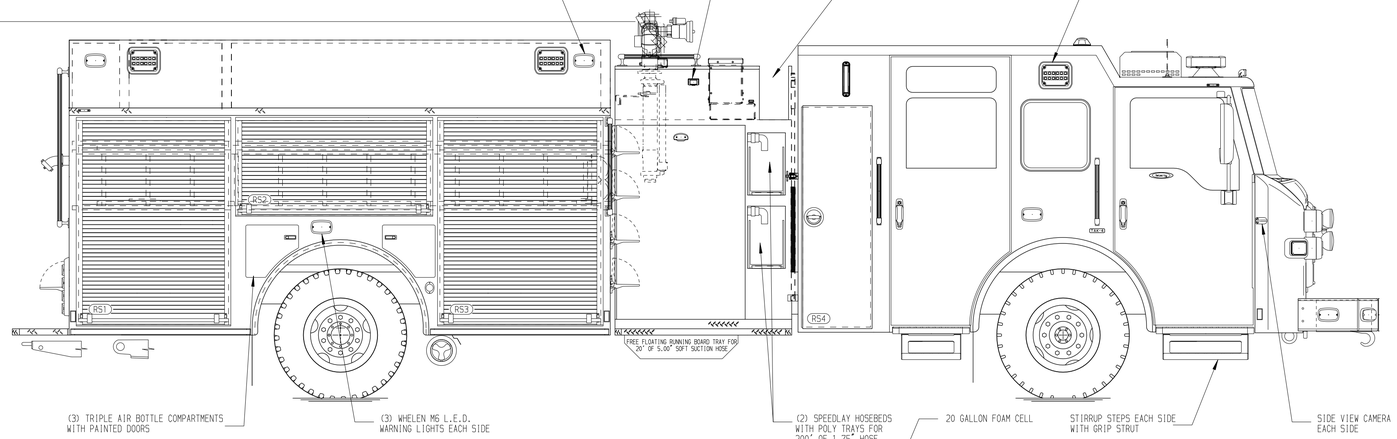


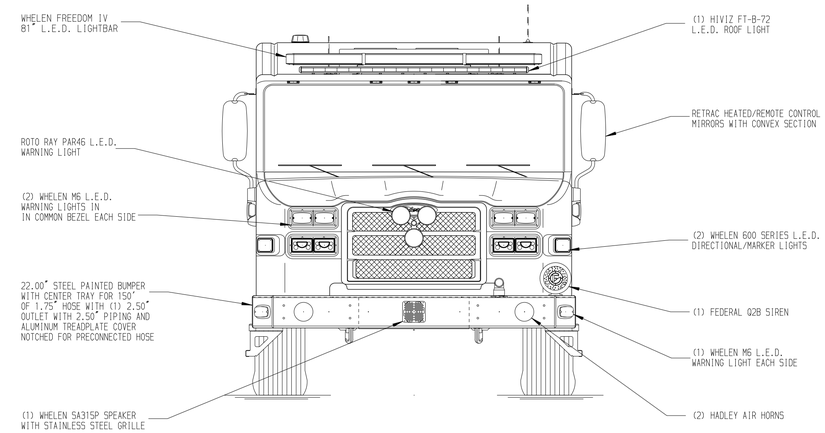


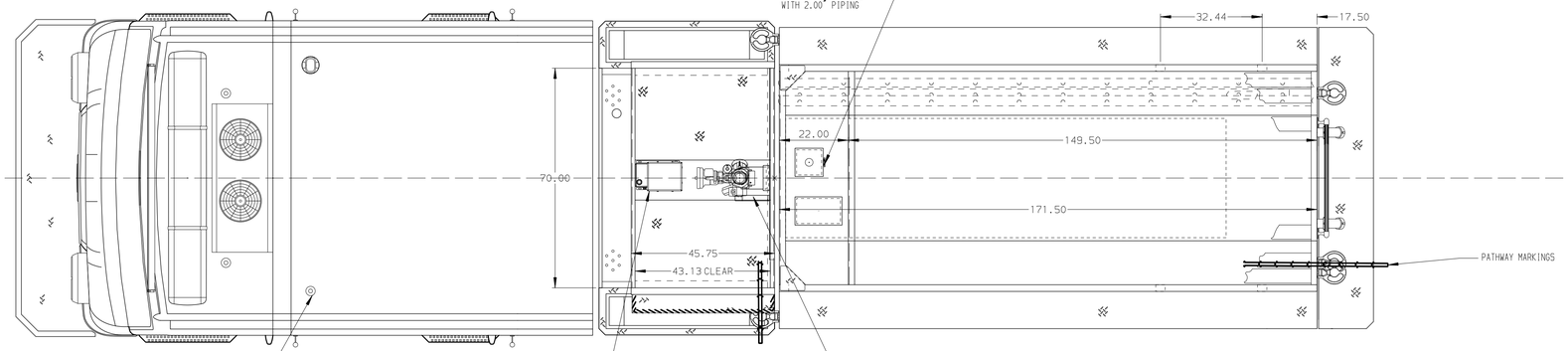


HOSEBED CAPACITIES

1 - 600' OF 3.00" D.J. POLY HOSE
2 - 1000' OF 5.00" D.J. POLY HOSE
3 - 600' OF 3.00" D.J. POLY HOSE

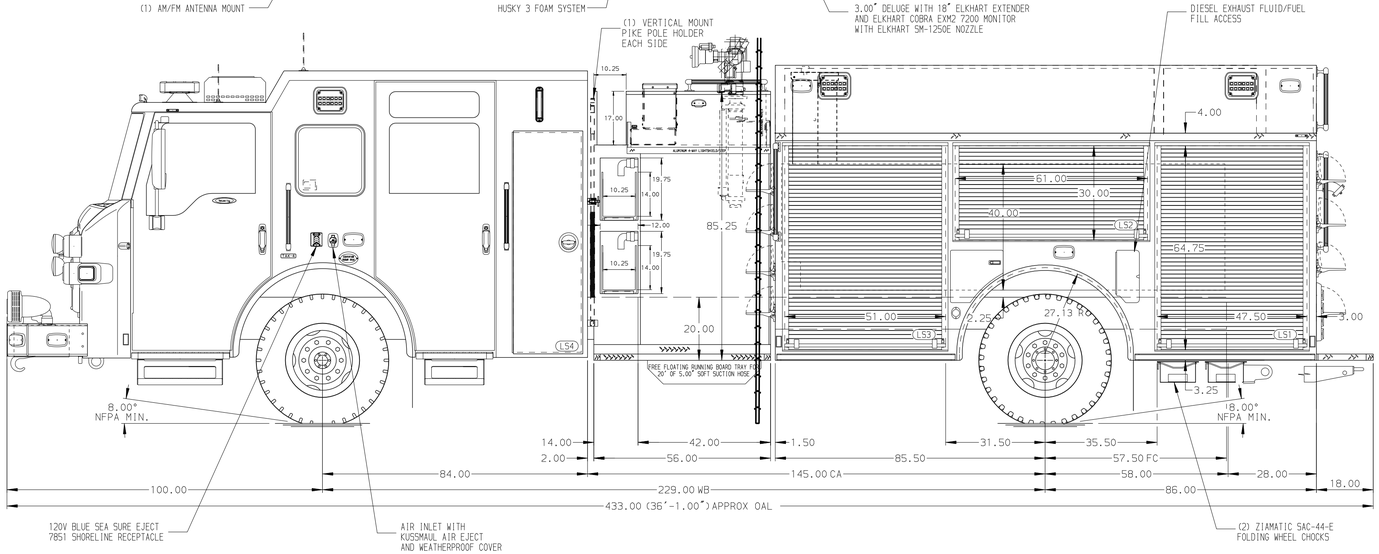


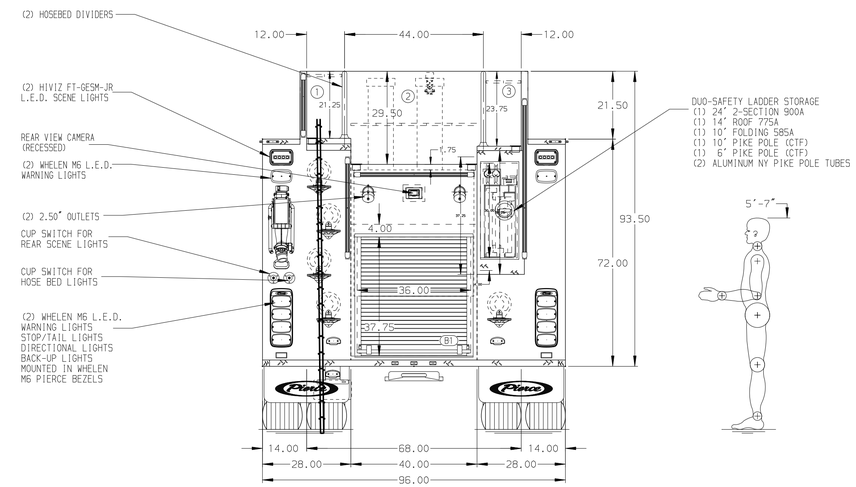


ALUMINUM BODY

SIDE ROLL AND FRONTAL IMPACT PROTECTION

NOTE

DIMENSIONS SHOWN ARE APPROXIMATE AND ARE SUBJECT TO MINOR DEVIATIONS AS MAY OCCUR OR BE NECESSARY IN CONSTRUCTION.
MINOR DETAILS NOT SHOWN.

1. BATTERY CHARGER LOCATED BEHIND DRIVER'S SEAT
2. BATTERY CHARGER INDICATOR BEHIND DRIVER'S SEAT DISPLAYED THROUGH WINDOW
3. DUAL L.E.D. LIGHT STRIPS LOCATED IN HOSE BED
4. TWO ADDITIONAL POLY TRAYS SHIPPED LOOSE
5. NORCOLD NR751BB REFRIGERATOR WITH ADJACENT A/C AND D/C OUTLET LOCATED PER ORDER

| REV | DATE | BY | CH |
|---|---|---|---|
| V | 29MAY25 | KLE | SJS |
| B | 30APR25 | CDU | SJS |
| V | 12MAR25 | CDU | CDU |

CHASSIS DATA
MAKE: PIERCE
MODEL: VELOCITY

Pierce MANUFACTURING INC.

TITLE: 2000 GPM, 770G TANK, 750G WATER, 20G FOAM 171" 2G PUMPER, VELOCITY ESP
FOR: LYNDHURST FIRE DEPARTMENT LYNDHURST, OHIO
DWG NO.: 39821AD

| JOB NO. | 39821 |
|---|---|
| SCALE | 1:24 |
| DATE | |
| DRAWN BY | JJB 26FEB25 |
| CHECKED BY | CDU 28FEB25 |
| SHEET SIZE | D |
| SHEET NO. | 1 OF 1 |

View File Created 29-MAY-2025 13:24:38