PUMPER

BODY
Long Aluminum 2nd Gen Pumper

CHASSIS
Enforcer Chassis

CHASSIS

AXLE, FRONT, CUSTOM
19,500 Lb TAK-4 Axle

AXLE, REAR
27,000 Lb Meritor Axle

ENGINE
450 HP Cummins L9 Engine

TRANSMISSION
Allison 6th Gen, 3000 EVS P

BUMPER
22" Extended Painted Steel

CAB
7000 Enforcer Cab

BODY

TOTAL TANK CAPACITY
750 Gallon New York Style Poly Tank

WATER CAPACITY
750 Gallons of Water

FOAM CELL
Foam Cell Not Required

COMPT, PUMPER, REAR
30.75" FF Restraint Rear Compt

COMPT, PUMPER, LEFT SIDE
161" Lap Full Height & Depth Front & Rear

COMPT, PUMPER, RIGHT SIDE
161" Lap Low FDLER

FIRE SUPPRESSION

PUMPHOUSE
45" Side Mount

PUMP
1500 GPM Waterous CXC20

CROSSLAYS, 1.50"
(2) 1.50" Standard Capacity

CROSSLAYS, 2.50"
2.50" Crosslay Not Required

SPEEDLAYS
Speedlays Not Required

GENERATOR
Generator Not Required

FOAM SYSTEM
Foam System Not Required

SAFETY

Side Roll and Frontal Impact Protection

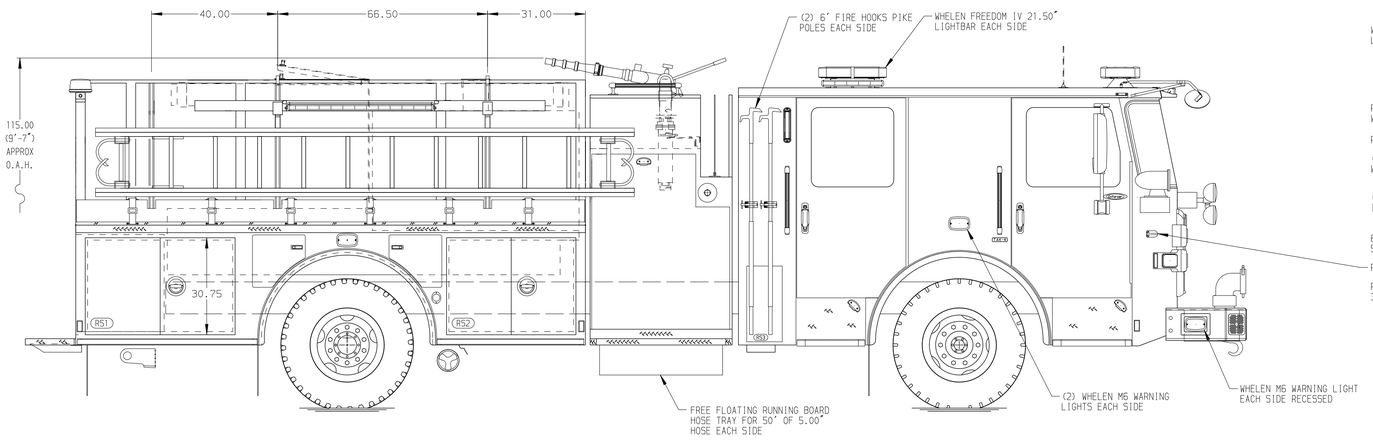

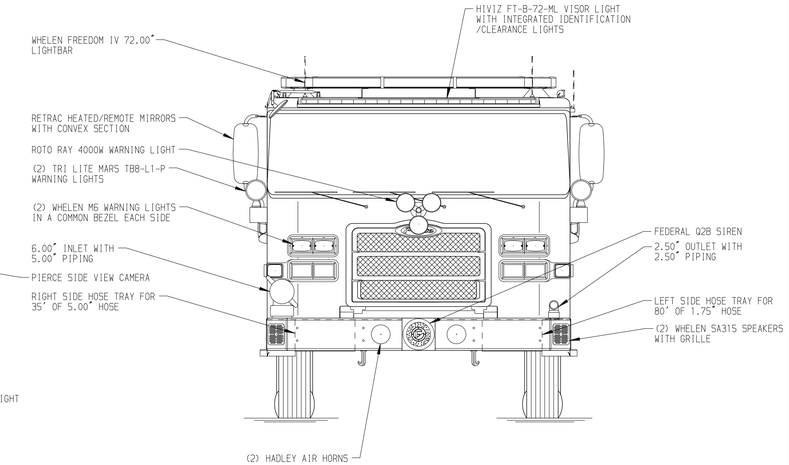

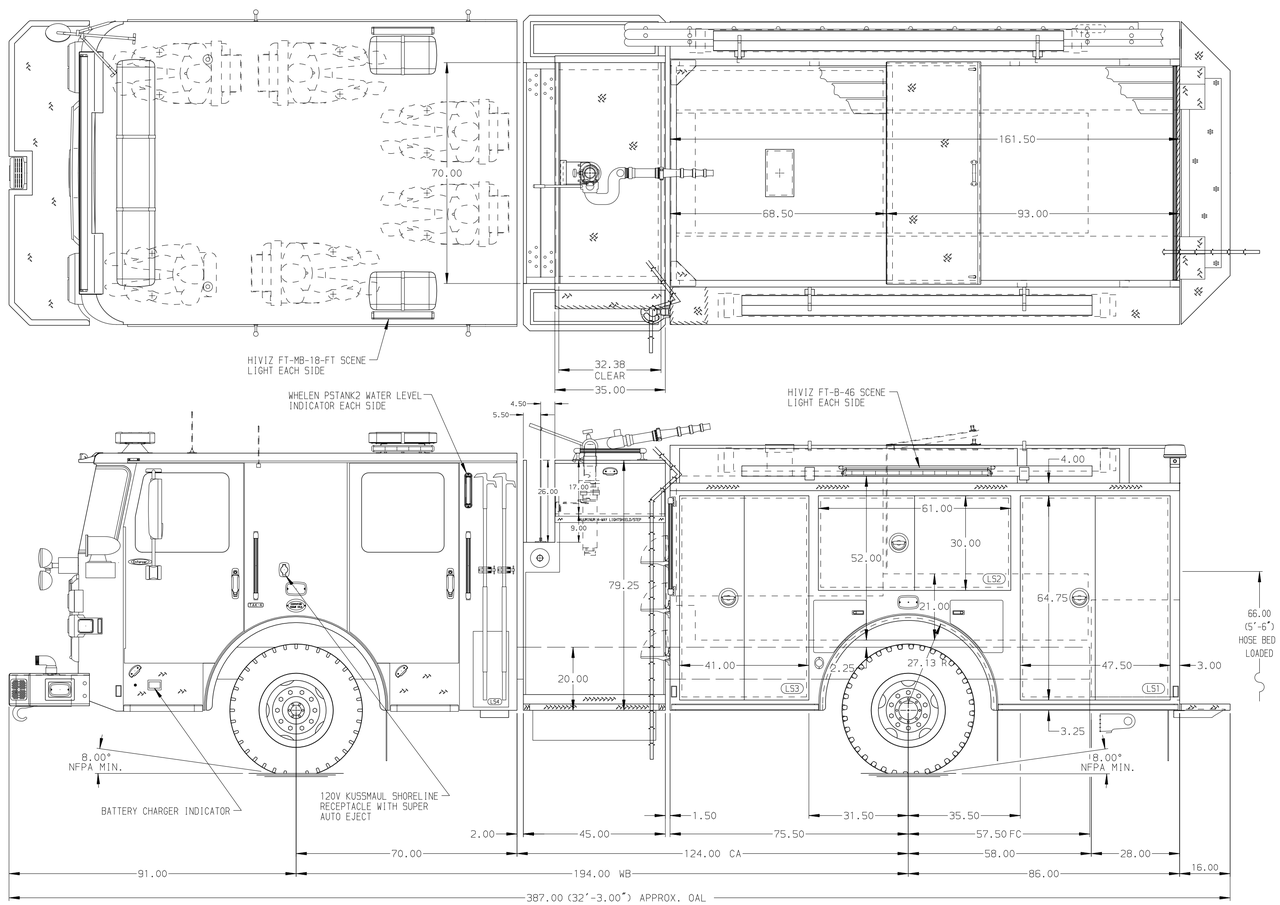

HOSEBED CAPACITY

BED 1
400' OF 1.75" D.J. POLY HOSE

BED 2
200' OF 2.50" D.J. POLY HOSE

BED 3
400' OF 3.00" D.J. POLY HOSE

BED 4
1000' OF 5.00" D.J. POLY HOSE

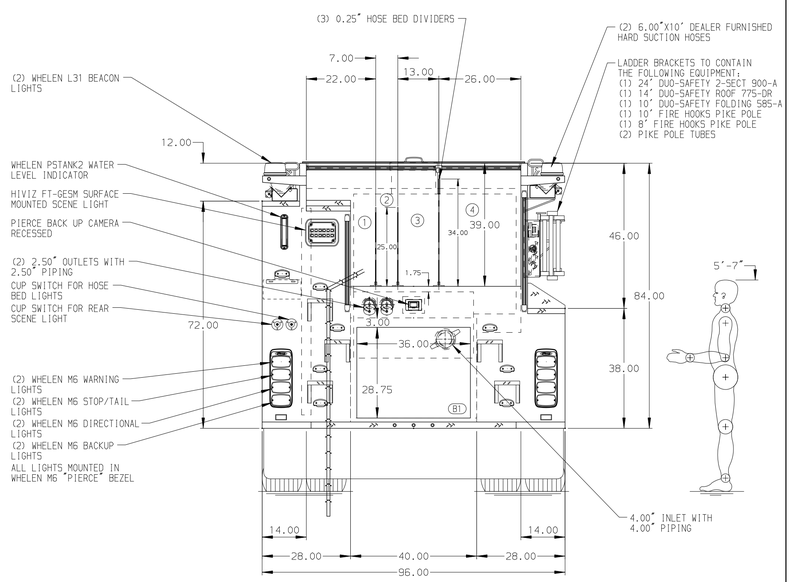

Pierce MANUFACTURING INC.

JOB NO.	39823
SCALE	1:24
DATE	
DRAWN BY	BST
DATE	30JUL24
CHECKED BY	AMI
DATE	31JUL24
SHEET SIZE	D
SHEET NO.	1 OF 1

TITLE: Pierce Pumper Approval Drawing
–

FOR: Roxana Fire Company
–

DWG NO.: 39823AD

NOTE

DIMENSIONS SHOWN ARE APPROXIMATE AND ARE SUBJECT TO MINOR DEVIATIONS AS MAY OCCUR OR BE NECESSARY IN CONSTRUCTION.
MINOR DETAILS NOT SHOWN.

1. BATTERY CHARGER LOCATED PER ORDER
2. FIVE FULL WIDTH/DEPTH ADJUSTABLE SHELVES WITH SIDES LOCATED PER ORDER
3. FIVE 120V DUPLEX RECEPTACLES IN REAR BODY LOCATED PER ORDER

REV	DATE	BY	CH		
7	10MAR25	LST	ZWE	CHASSIS DATA	
6	24JAN25	LST	ZWE		
5	26NOV24	BST	ZWE	MAKE	
4	29OCT24	BST	ZWE	PIERCE	
3	25OCT24	LST	CSH	MODEL	
				ENFORCER	

View File Created 10-MAR-2025 13:11:04