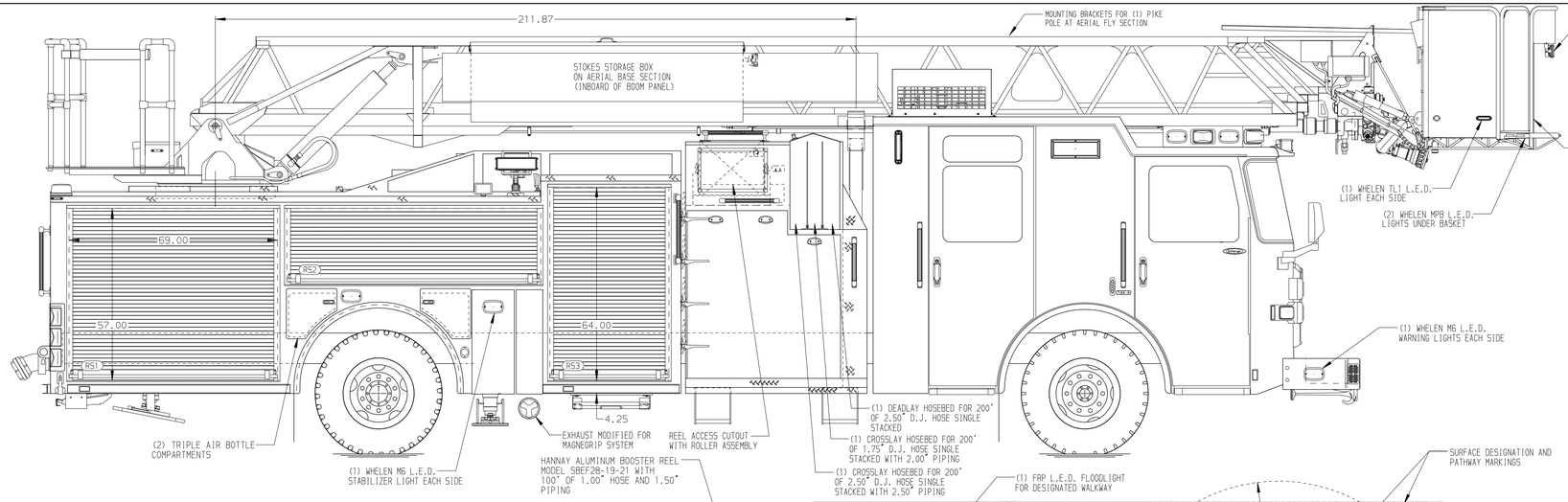

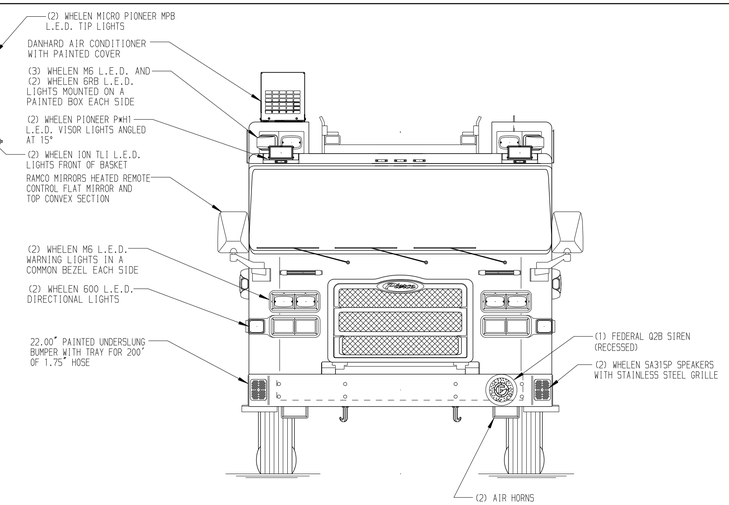

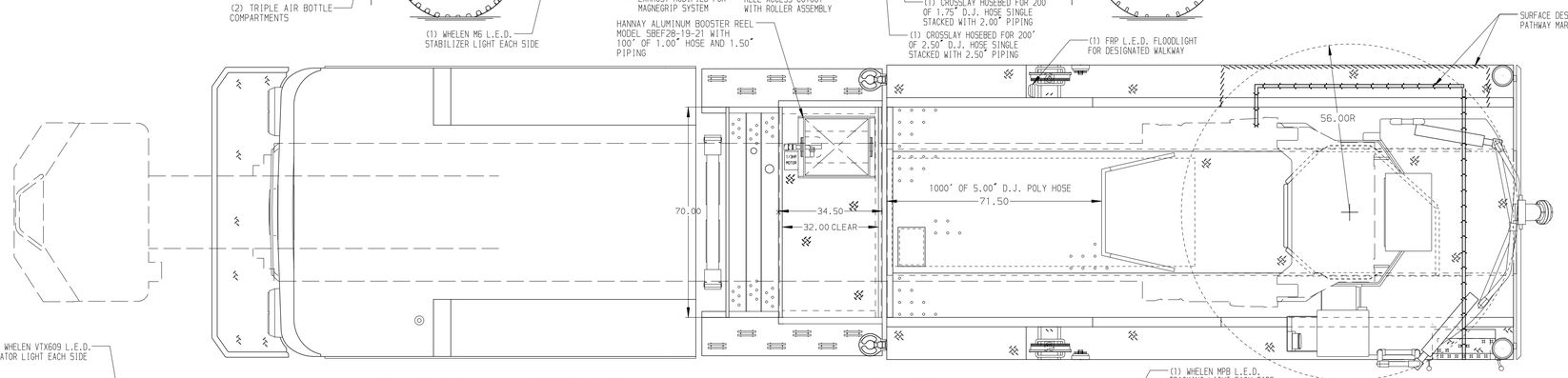

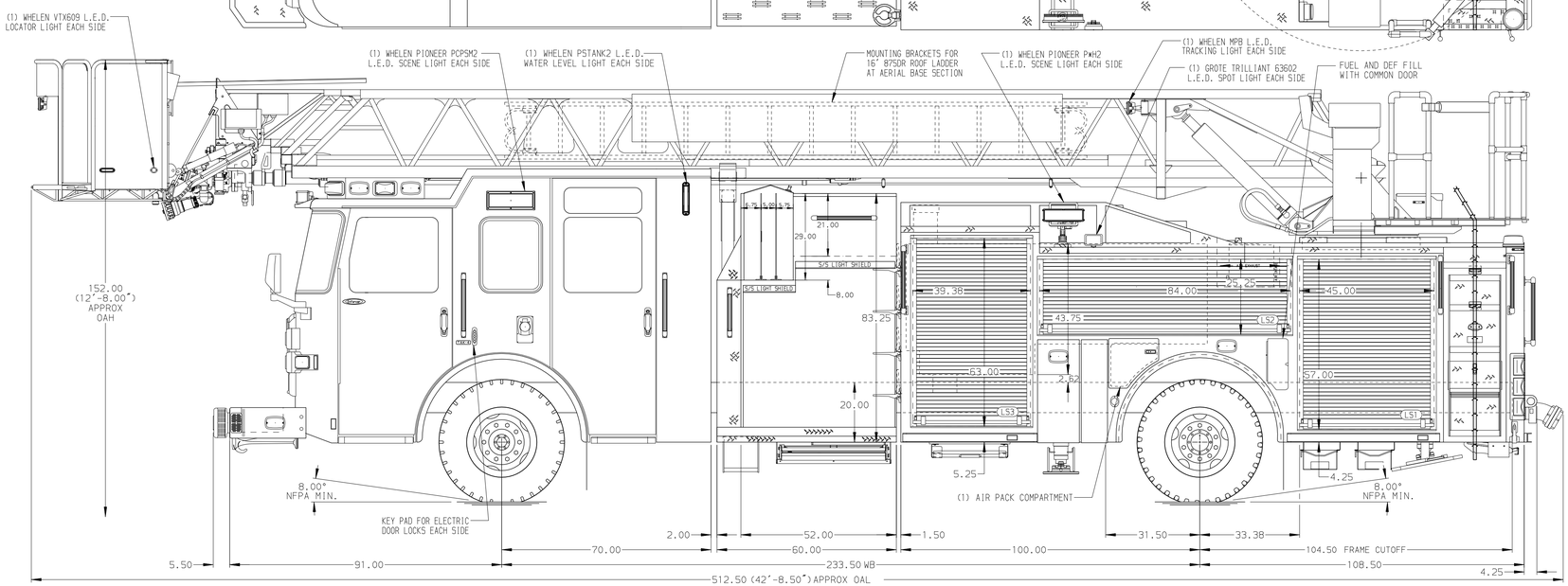

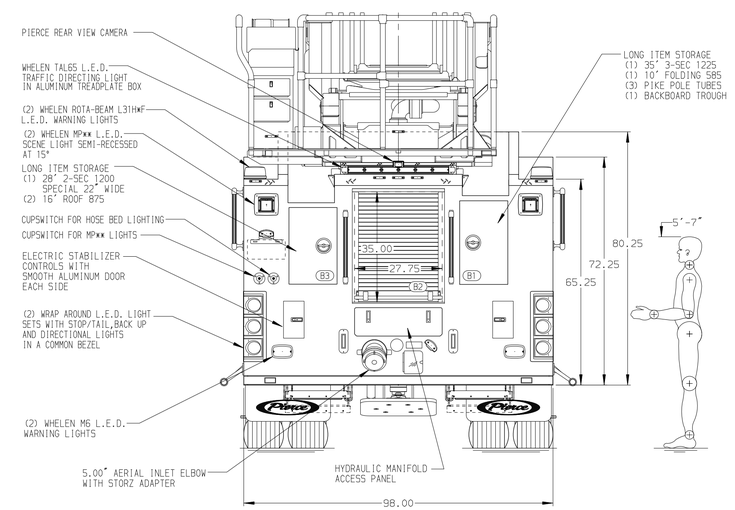

ALUMINUM BODY

NOTE

DIMENSIONS SHOWN ARE APPROXIMATE AND ARE SUBJECT TO MINOR DEVIATIONS AS MAY OCCUR OR BE NECESSARY IN CONSTRUCTION.
MINOR DETAILS NOT SHOWN.

1. NO LIMITED RETRACTION REQUIRED
2. ONE 2.50" OUTLET WITH 2.50" PIPING AND SWIVEL LOCATED IN BUMPER TRAY
3. SHORELINE 30A RECEPTACLE WITH KUSSMAUL SUPER AUTO-EJECT LOCATED ON DRIVER SIDE OF THE CAB
4. AIR INLET WITH DISCONNECT COUPLING IN THE DRIVER SIDE STEPWELL
5. BATTERY CHARGER LOCATED PER ORDER
6. BATTERY CHARGE INDICATOR LOCATED ON DRIVER SEAT RISER
7. TEN ADJUSTABLE SHELVES LOCATED IN COMPARTMENTS PER ORDER
8. TWO FLOOR MOUNTED SLIDE-OUT TRAY LOCATED IN COMPARTMENTS PER ORDER
9. ONE SWING-OUT TOOLBOARD LOCATED IN COMPARTMENT PER ORDER
10. ONE SLIDE-OUT TOOLBOARD LOCATED IN COMPARTMENT PER ORDER
11. TWO VERTICAL PARTITIONS LOCATED IN COMPARTMENTS PER ORDER
12. THREE BACK-WALL MOUNTED PEGBOARDS LOCATED IN COMPARTMENTS PER ORDER
13. TECNIQ 4-SECTION RUNG LIGHTING AT AERIAL DEVICE
14. 1500 GPM HIGH FLOW WATERWAY
15. LIFTING EYE ROPE RESCUE ATTACHMENT AT AERIAL TIP
16. JUMPER STUDS LOCATED IN DRIVER SIDE STEPWELL

REV	DATE	BY	CH
2	08SEP25	ANZ	SJS
1	24JUN25	ANZ	SJS

CHASSIS DATA
MAKE: PIERCE
MODEL: ENFORCER

Pierce MANUFACTURING INC.

TITLE: 107' ASCENDANT HSL AERIAL LADDER AND BODY ASSEMBLY
500 GALLON WATER TANK

FOR: CITY OF STILLWATER
STILLWATER, OK

DWG NO.: 39825AD

JOB NO.	39825
SCALE	1:24
DATE	31MAR25
DRAWN BY	ANZ
CHECKED BY	BYO
SHEET SIZE	D
SHEET NO.	1 OF 1

View File Created 08-SEP-2025 10:35:05