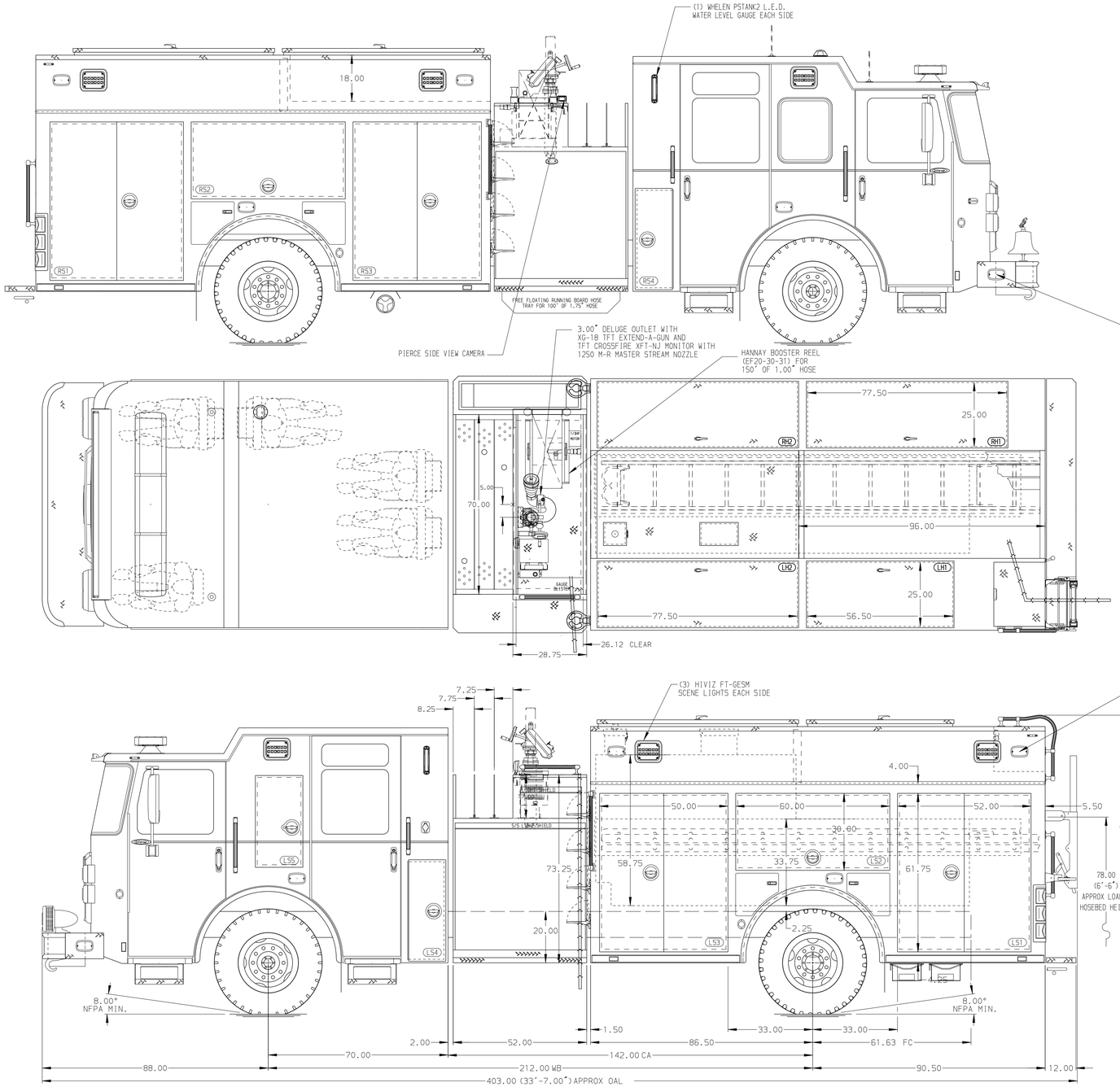

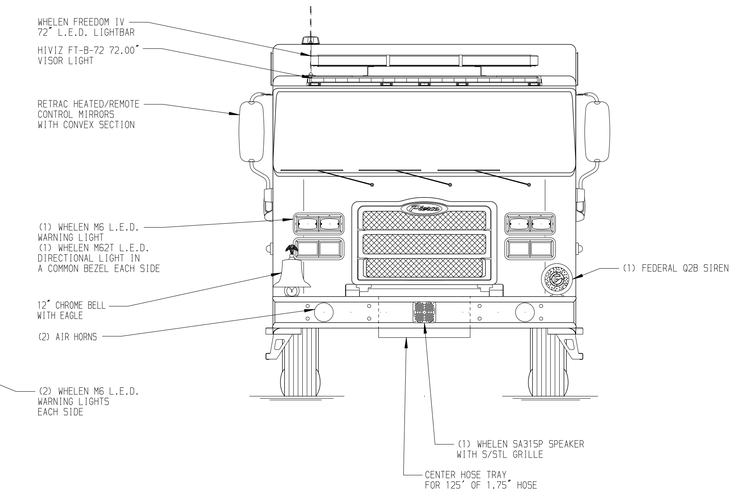

BODY	TOTAL TANK CAPACITY
Pumper, HDRP, Aluminum	780 Gallon Poly Tank
COMPT,LEFT SIDE	WATER CAPACITY
177" Lap Full Height & Depth Front & Rear	750 Gallons of Water
COMPT,RIGHT SIDE	FOAM CELL CAPACITY
177" Lap Full Height & Depth Front & Rear	30 Gallons of Foam
COMPT,REAR	FOAM SYSTEM
29.50" FF Double Door Rear Compt w/Tailboard	Husky 3 Single Agent Foam System

HOSEBED CAPACITY

BED 1
200' OF 2.50" D.J. POLY HOSE
BED 2
900' OF 3.00" D.J. POLY HOSE
BED 3
900' OF 3.00" D.J. POLY HOSE

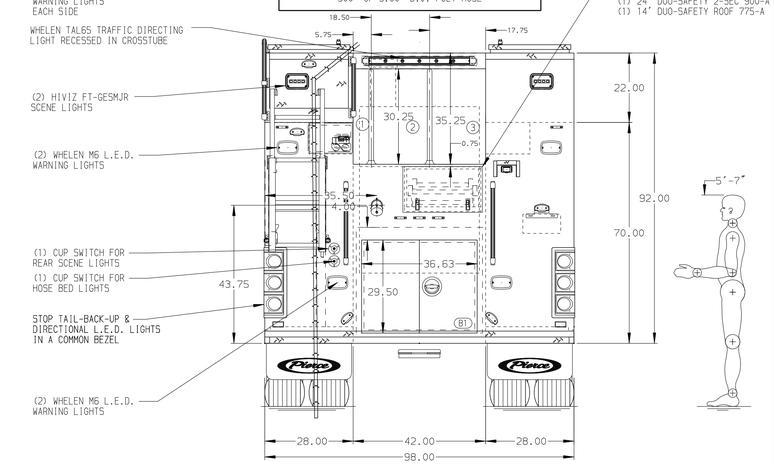

CHASSIS	CAB	AXLE,FRONT,CUSTOM	TRANSMISSION	PUMPHOUSE	CROSSLAYS,1.50"	SPEEDLAYS	SAFETY
Enforcer Chassis	7010 Enforcer Cab	20,000 Lb Dana Axle	AllIson 6th Gen, 4000 EVS P	52" Control Zone Side Mount	(3) 1.50" Standard Capacity	Speedlays Not Required	Side Roll and Frontal Impact Protection
ENGINE	BUMPER	AXLE,REAR		PUMP	CROSSLAYS,2.50"	GENERATOR	
455 HP Cummins X12 Engine	19" Extended Stainless Steel	27,000 Lb Dana Axle		1500 GPM Waterous CSU	2.50" Crosslay Not Required	Generator Not Required	

NOTE

DIMENSIONS SHOWN ARE APPROXIMATE AND ARE SUBJECT TO MINOR DEVIATIONS AS MAY OCCUR OR BE NECESSARY IN CONSTRUCTION.
MINOR DETAILS NOT SHOWN.

1. ONE 1.50 OUTLET WITH 2.00 PIPING AND SWIVEL LOCATED IN CENTER BUMPER TRAY
2. AIR INLET/OUTLET WITH DISCONNECT FITTING IN THE DRIVER SIDE STEPWELL
3. BATTERY CHARGER LOCATED PER ORDER

REV	DATE	BY	CH
B	12APR24	KLE	AST
A	07FEB24	KLE	AST

CHASSIS DATA
MAKE: PIERCE
MODEL: ENFORCER

Pierce MANUFACTURING INC.

TITLE: Pierce Pumper Approval Drawing
FOR: Springfield Fire Department
DWG NO.: 39833AD-SH1

JOB NO.	39833
SCALE	1:24
DATE	
DRAWN BY	KLE 21NOV23
CHECKED BY	AMI 22NOV23
SHEET SIZE	D
SHEET NO.	1 OF 2

View File Created 15-APR-2024 07:11:23