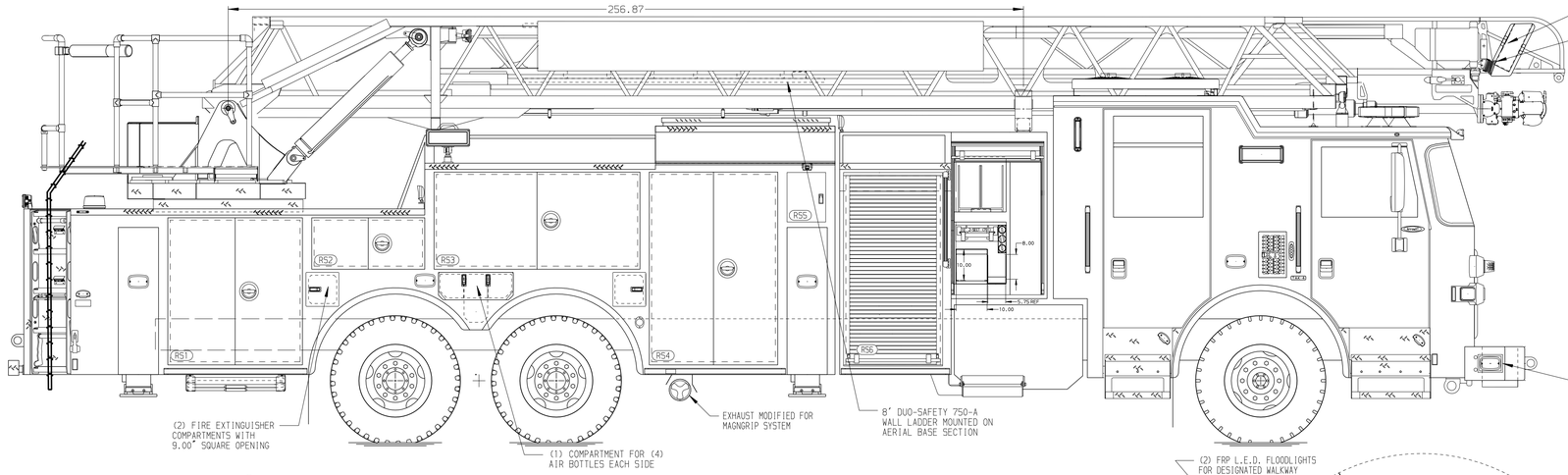

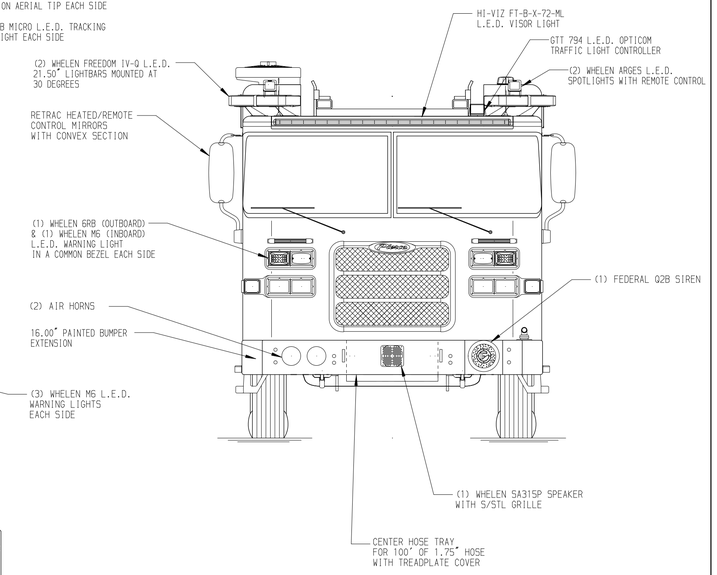

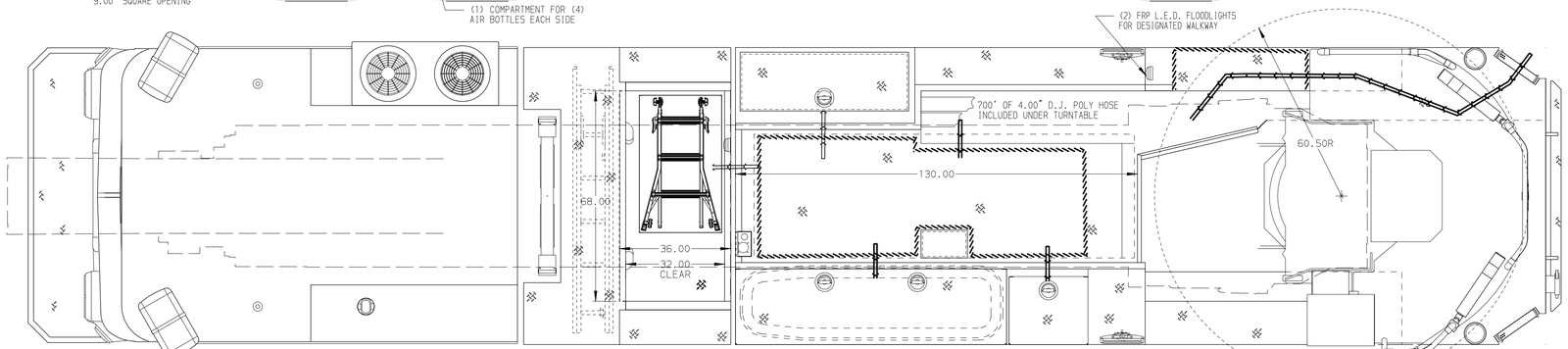

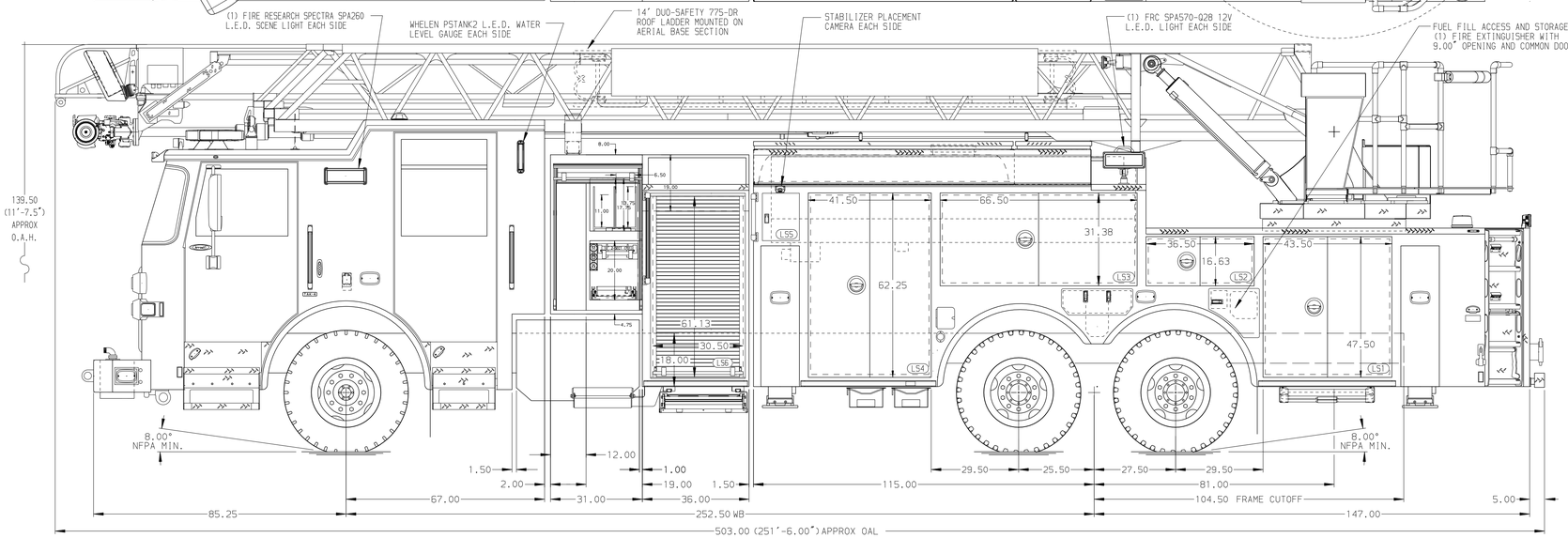

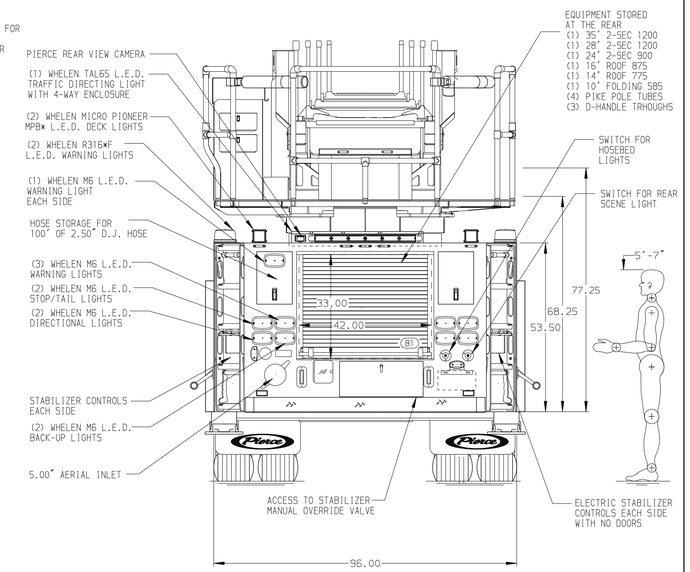

ALUMINUM BODY | SIDE ROLL AND FRONTAL IMPACT PROTECTION | MAX O.A.H. 140.00"

Pierce MANUFACTURING INC.

NOTE

DIMENSIONS SHOWN ARE APPROXIMATE AND ARE SUBJECT TO MINOR DEVIATIONS AS MAY OCCUR OR BE NECESSARY IN CONSTRUCTION.
MINOR DETAILS NOT SHOWN.

1. 21" LIMITED RETRACTION
2. SHORELINE RECEPTACLE WITH KUSSMAUL STRAIT BLADE LOCATED ON DRIVERS SIDE OF CAB
3. AIR INLET WITH DISCONNECT COUPLING PER ORDER
4. BATTERY CHARGER LOCATED PER ORDER
5. BATTERY CHARGE INDICATOR LOCATED PER ORDER
6. SIX ADJUSTABLE SHELVES PER ORDER
7. FIVE FLOOR MOUNTED SLIDE-OUT TRAYS PER ORDER
8. 3.00" RAISED AERIAL PEDESTAL
9. LIFTING EYE ROPE RESCUE ATTACHMENT AT AERIAL TIP
10. 1500 GPM HIGH FLOW WATERWAY
11. ONE SLIDE-OUT TOOLBOARD PER ORDER
12. TWO 120V RECEPTACLES PER ORDER
13. ONE 1.50 OUTLET WITH 2.00 PIPING AND SWIVEL LOCATED ON TOP OF LEFT SIDE BUMPER
14. RUNG LIGHTING ON AERIAL LADDER
15. FOUR SLIDE-OUT TRAYS PER ORDER
16. THREE VERITCAL PARTITIONS PER ORDER
17. TWO PACK TRACK ON BACK WALL PER ORDER
18. ONSPOT AUTOMATIC TIRE CHAINS

REV	DATE	BY	CH
V	23JULY25	LWE	GKH
V	07JULY25	LWE	GKH
V	16MAY25	LWE	GKH
V	19MAR25	LWE	JLO

CHASSIS DATA	
MAKE	PIERCE
MODEL	ARROW XT
TITLE	107' ASCENDANT AERIAL LADDER AND BODY ASSEMBLY 500 GALLON WATER TANK
FOR	WENATCHEE VALLEY FIRE DEPARTMENT WENATCHEE, WA
DWG NO.	39863AD

JOB NO.	39863
SCALE	1:24
DATE	
DRAWN BY	LWE
14MAR25	
CHECKED BY	JLO
17MAR25	
SHEET SIZE	D
SHEET NO.	1 OF 1

View File Created 23-JUL-2025 10:10:25