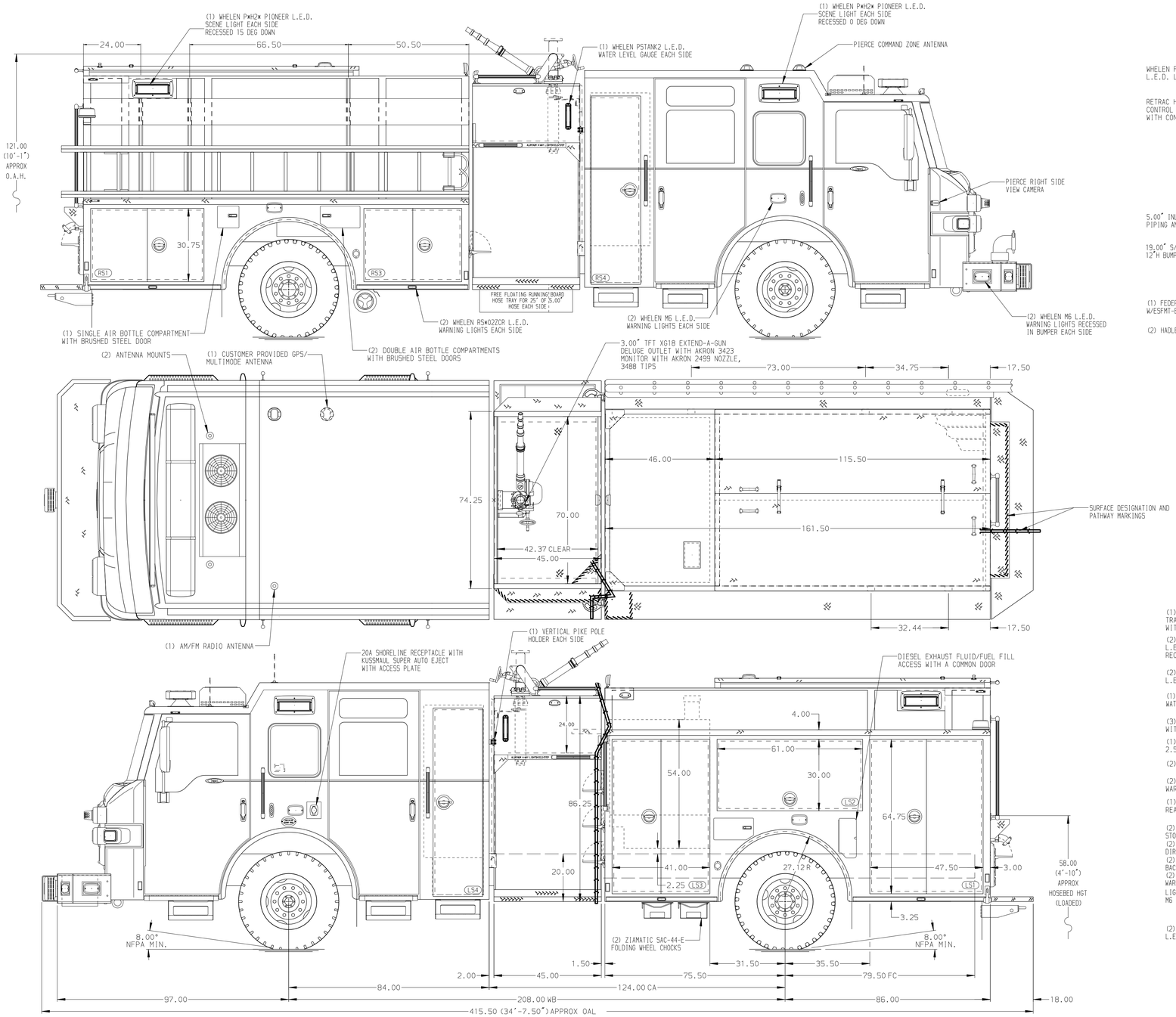

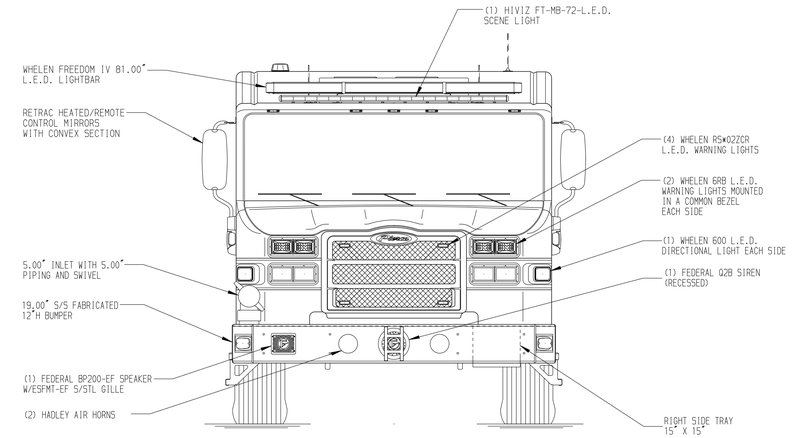

HOSEBED CAPACITIES

1. 200' OF 1.75" D.J. POLY HOSE
2. 800' OF 2.50" D.J. POLY HOSE
3. 800' OF 5.00" D.J. POLY HOSE
4. 800' OF 2.50" D.J. POLY HOSE WITH 100' OF 1.75" D.J. POLY HOSE

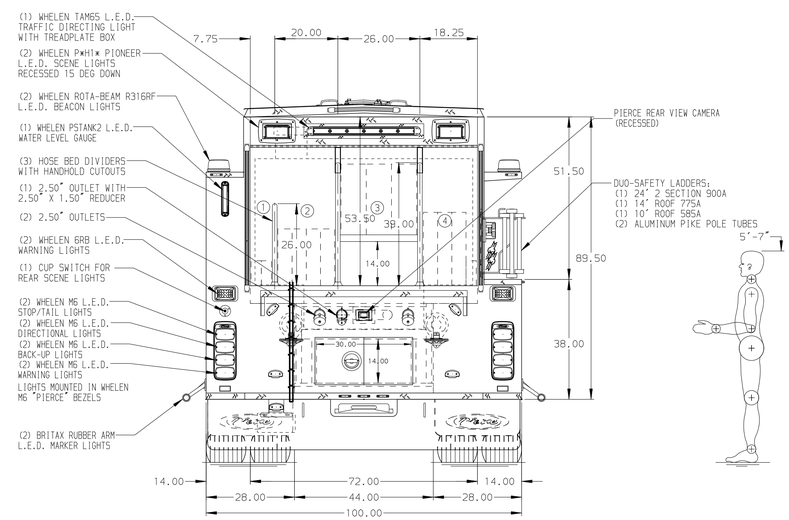

ALUMINUM BODY

SIDE ROLL AND FRONTAL IMPACT PROTECTION

NOTE

DIMENSIONS SHOWN ARE APPROXIMATE AND ARE SUBJECT TO MINOR DEVIATIONS AS MAY OCCUR OR BE NECESSARY IN CONSTRUCTION.
MINOR DETAILS NOT SHOWN.

1. AIR INLET/OUTLET W/ DISCONNECT FITTING LOCATED ON DRIVER SIDE PUMP PANEL
2. BATTERY CHARGER LOCATED BEHIND DRIVER SEAT
3. BATTERY CHARGE INDICATOR LOCATED IN THE DRIVER SIDE WINDOW
4. NINE ADJUSTABLE SHELVES LOCATED PER ORDER
5. THREE FLOOR MOUNTED SLIDE OUT TRAYS LOCATED PER ORDER
6. ONE SWING-OUT TOOLBOARD LOCATED PER ORDER
7. SEVEN ALUMINUM PEGBOARDS LOCATED PER ORDER
8. FIVE 15/20A 3-WIRE RECEPTACLES LOCATED PER ORDER

REV	DATE	BY	CH
7	28JAN26	JAM	TDC
6	13NOV25	JAM	TDC
5	13OCT25	JAM	TDC
4	01AUG25	SJM	IPR

CHASSIS DATA
MAKE: PIERCE
MODEL: IMPEL FR

Pierce MANUFACTURING INC.

TITLE: 1500GPM, 500G TANK, 500G WATER, 0G FOAM 161" 2G PUMPER, MUX
FOR: VILLAGE OF BEDFORD PARK FIRE DEPARTMENT BEDFORD PARK, ILLINOIS
DWG NO.: 39865AD

JOB NO.	39865 01-02
SCALE	1:24
DATE	
DRAWN BY	SJM
DATE	21JUL25
CHECKED BY	IPR
DATE	21JUL25
SHEET SIZE	D
SHEET NO.	1 OF 1

View File Created 29-JAN-2026 14:47:32