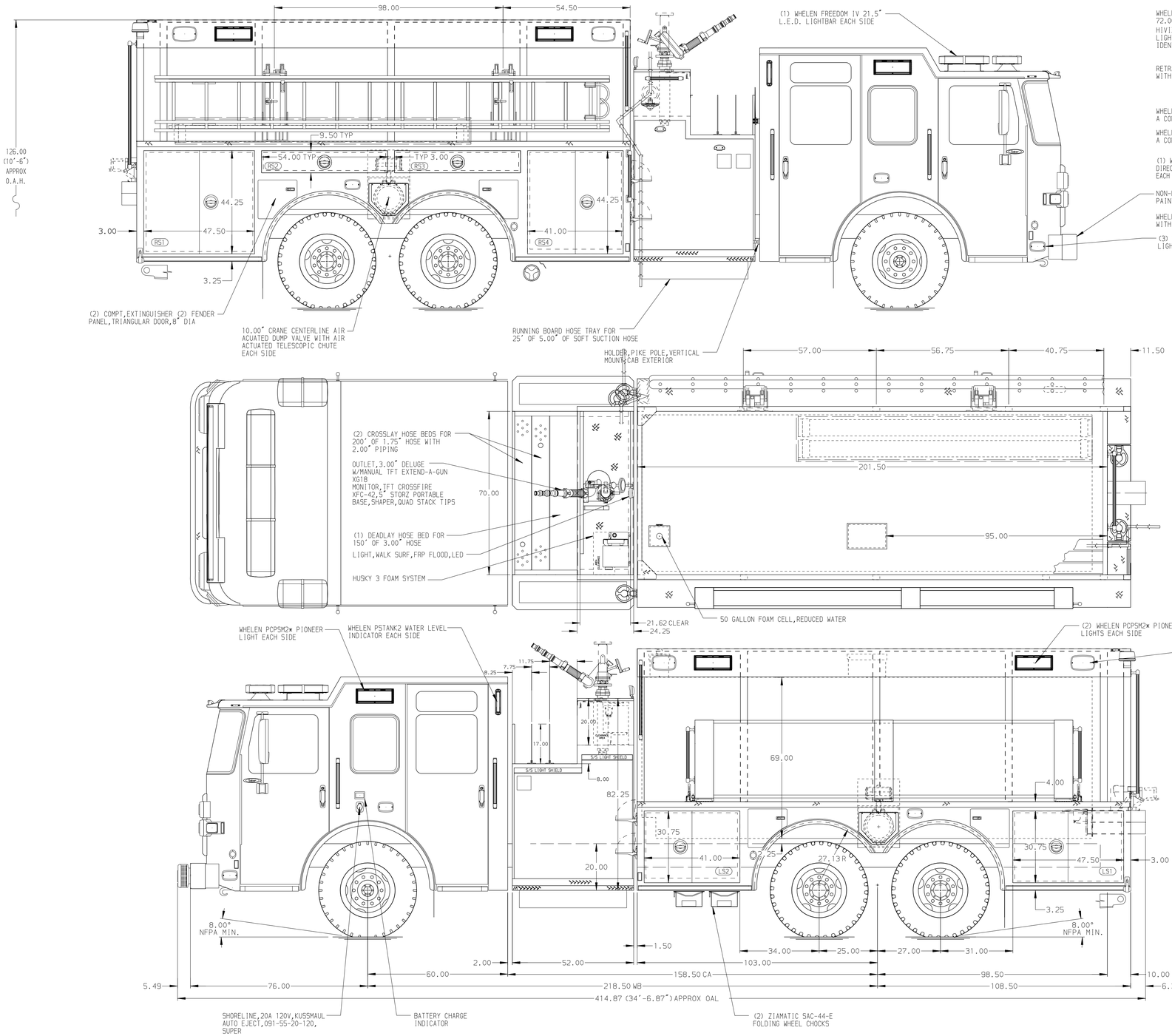

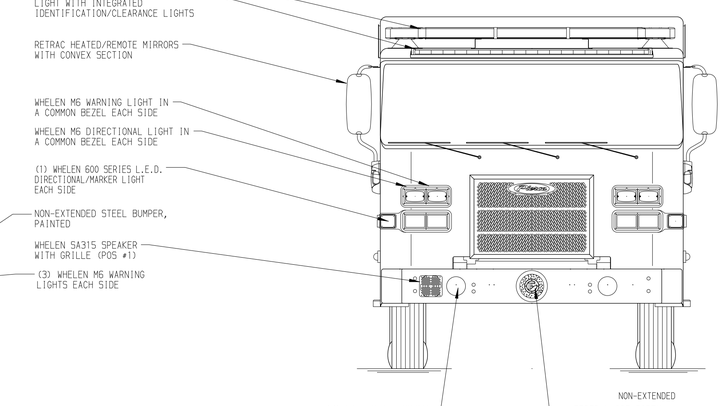

HOSEBED CAPACITIES

① 1000' OF 5.00" D.J. POLY HOSE

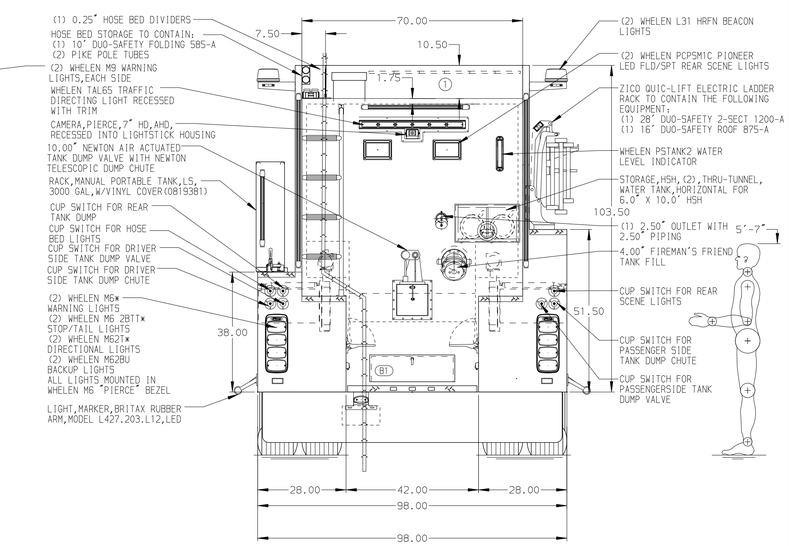

ALUMINUM BODY | SIDE ROLL AND FRONTAL IMPACT PROTECTION

NOTE

DIMENSIONS SHOWN ARE APPROXIMATE AND ARE SUBJECT TO MINOR DEVIATIONS AS MAY OCCUR OR BE NECESSARY IN CONSTRUCTION.
MINOR DETAILS NOT SHOWN.

REV	DATE	BY	CH
V	04APR24	RWR	CCS
V	11MAR24	RWR	CCS
V	19JAN24	RWR	CCS
V	26OCT23	BST	WKL

CHASSIS DATA — MAKE: PIERCE — MODEL: SABER FR

Pierce MANUFACTURING INC.

TITLE: 2000-D-3000P,2950W 50F,211" 2GT,LS LOW,RS 3/4 HGT 52" SIDE CONTROL,(2) 1.50 XLAYS, (1) DEADLAY

FOR: LONG GROVE FIRE PROTECTION DISTRICT, LONG GROVE, ILLINOIS

DWG NO.: 39873AD

JOB NO.	39873
SCALE	1:24
DATE	
DRAWN BY	BST 18OCT23
CHECKED BY	WKL 19OCT23
SHEET SIZE	D
SHEET NO.	1 OF 1

View File Created 08-APR-2024 07:32:52