PUMPER

BODY
Long Aluminum 2nd Gen Pumper

CHASSIS
Enforcer Chassis

CHASSIS

AXLE, FRONT, CUSTOM
20,000 lb Dana Axle

AXLE, REAR
27,000 lb Meritor Axle

ENGINE
450 HP Cummins L9 Engine

TRANSMISSION
Allison 6th Gen, 3000 EVS P

BUMPER
26" Extended Stainless Steel

CAB
7010 Enforcer Cab

BODY

WATER TANK
650 Gallon New York Style Water Tank

COMPT, PUMPER, REAR
30.75" FF Lap Double Door Rear Compt

COMPT, PUMPER, LEFT SIDE
161" Rollup Full Height Front & Rear FDLER

COMPT, PUMPER, RIGHT SIDE
161" Rollup Low FDLER

FIRE SUPPRESSION

PUMPHOUSE
45" Control Zone Side Mount

PUMP
1500 GPM Waterous CSU

CROSSLAYS, 1.50"
1.50" Crosslays Not Required

CROSSLAYS, 2.50"
2.50" Crosslay Not Required

DEADLAY
300' of 2.00" Hose

GENERATOR
Generator Not Required

Foam System
Foam System Not Required

Foam Cell
Foam Cell Not Required

Side Roll and Frontal Impact Protection

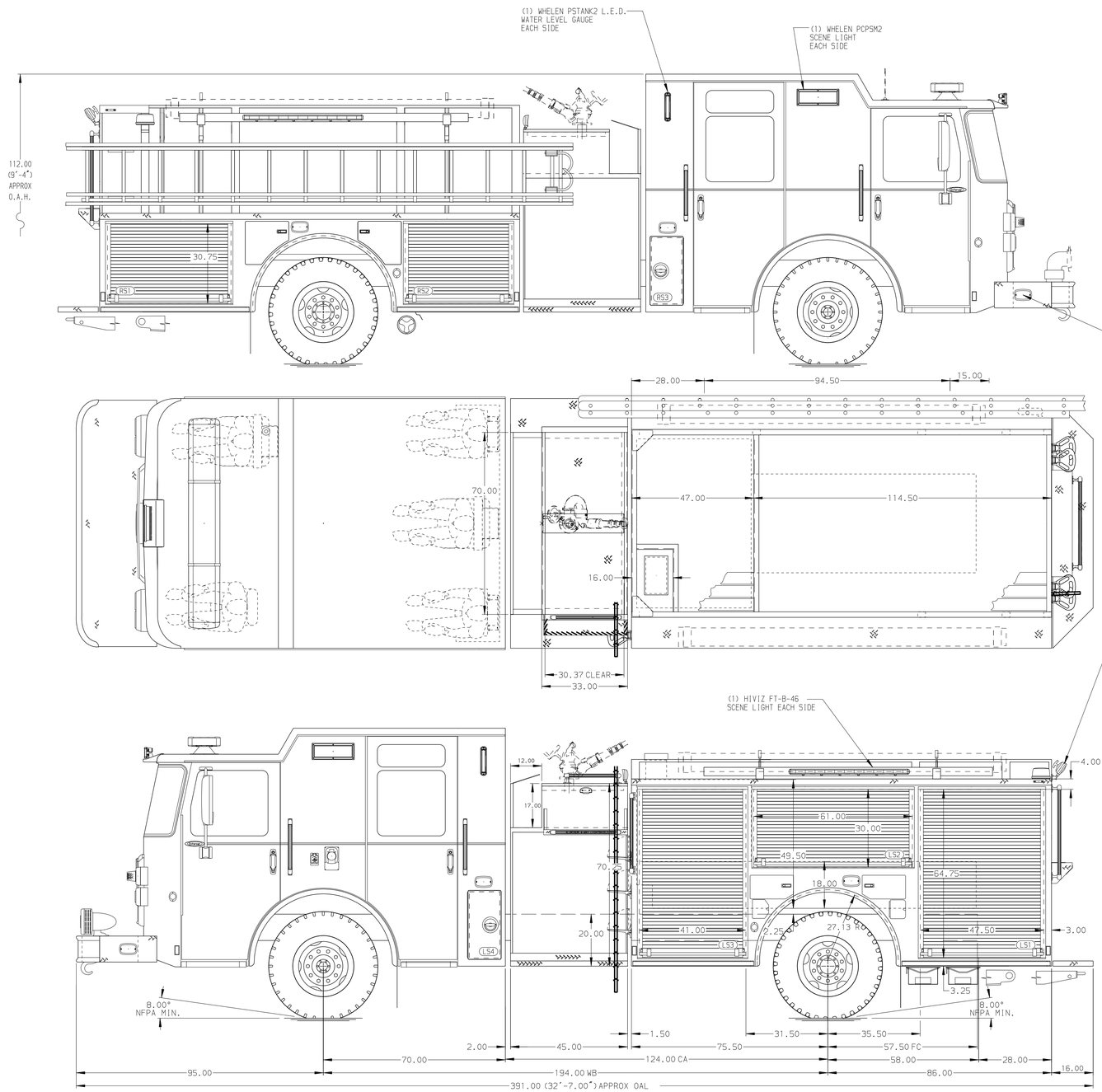

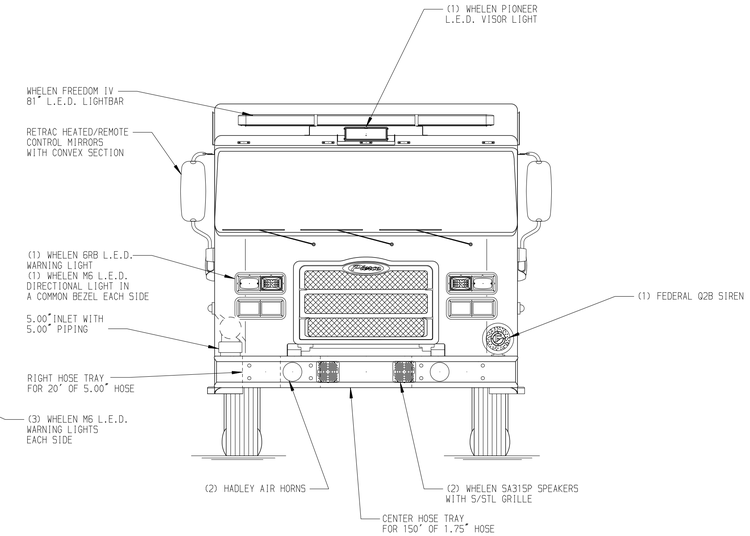

HOSEBED CAPACITY

BED 1
300' OF 1.75" D.J. POLY HOSE

BED 2
300' OF 2.50" D.J. POLY HOSE

BED 3
100' OF 2.00" D.J. POLY HOSE

BED 4
750' OF 5.00" D.J. POLY HOSE

BED 5
300' OF 1.75" D.J. POLY HOSE

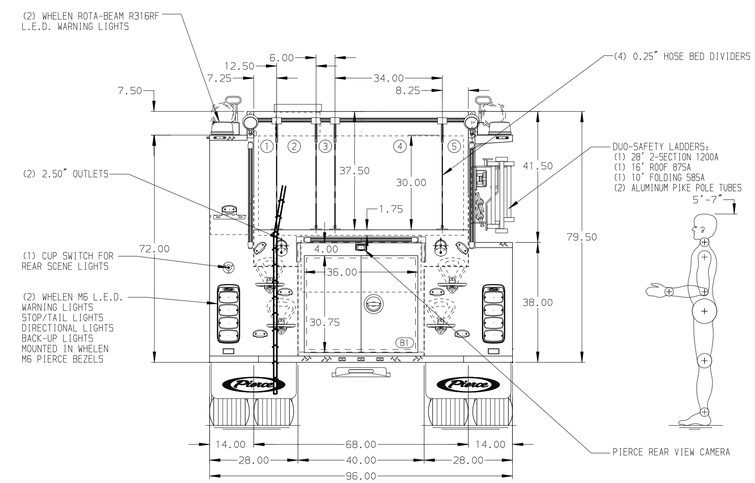

NOTE
DIMENSIONS SHOWN ARE APPROXIMATE AND ARE SUBJECT TO MINOR DEVIATIONS AS MAY OCCUR OR BE NECESSARY IN CONSTRUCTION.
MINOR DETAILS NOT SHOWN.

1. ONE 1.50 OUTLET WITH 2.00 PIPING AND SWIVEL LOCATED IN CENTER BUMPER TRAY PER SHOP ORDER
2. SHORELINE RECEPTACLE WITH KUSSMAUL SUPER AUTO-EJECT LOCATED ON DRIVER SIDE OF THE CAB
3. AIR INLET WITH DISCONNECT COUPLING IN THE DRIVER SIDE STEPWELL
4. BATTERY CHARGER LOCATED BEHIND DRIVER SEAT
5. FIVE ADJUSTABLE SHELVES IN COMPARTMENTS PER SHOP ORDER
6. PAC TRAC ON WALL IN COMPARTMENT PER SHOP ORDER
7. PARTITION IN COMPARTMENT PER SHOP ORDER

REV	DATE	BY	CH
B	23JUN25	MMF	SJS
A	13MAY25	LST	SJS

CHASSIS DATA
MAKE: PIERCE
MODEL: ENFORCER

Pierce MANUFACTURING INC.

TITLE	Pierce Pumper Approval Drawing -	JOB NO.	39888
		SCALE	1:24
FOR	Westfield Fire Department -	DRAWN BY	MMF
		DATE	10APR25
		CHECKED BY	AMI
		DATE	10APR25
DWG NO.	39888AD	SHEET SIZE	D
		SHEET NO.	1 OF 1

View File Created 09-SEP-2025 09:46:46