PUMPER, PUC

BODY
Pumper, PUC, Aluminum

CHASSIS
Enforcer Chassis, PUC

ELECTRICAL SYSTEM
MUX

CHASSIS

AXLE, FRONT, CUSTOM
19,500 Lb TAK-4 Axle

AXLE, REAR
27,000 Lb Dana Axle

ENGINE
450 HP Cummins L9 Engine

TRANSMISSION
ALLison 6th Gen, 3000 EVS P

BUMPER
19" Extended Under Slung Stainless Steel

CAB
7010 Enforcer Cab, PUC

BODY

TOTAL TANK CAPACITY
750 Gallon Poly Tank

WATER CAPACITY
730 Gallons of Water

FOAM CELL CAPACITY
20 Gallon Foam Cell

COMPT, PUMPER, REAR
33.50" FF Rollup Rear Compt w/Tailboard, PUC

COMPT, PUMPER, LEFT SIDE
214" Rollup Full Height & Depth Front & Rear, PUC

COMPT, PUMPER, RIGHT SIDE
214" Rollup Full Height & Depth Front & Rear, PUC

FIRE SUPPRESSION

PUMPHOUSE
Control Zone, PUC

PUMP
1500 GPM Pierce PUC

CROSSLAYS, 1.50"
(2) 1.50", Poly Trays, 200'

CROSSLAYS, 2.50"
(1) 2.50", Poly Tray, 200'

SPEEDLAYS
Speedlays Not Required

GENERATOR
Generator Not Required

FOAM SYSTEM
Husky 3 Single Agent Foam System

SAFETY

Side Roll and Frontal Impact Protection

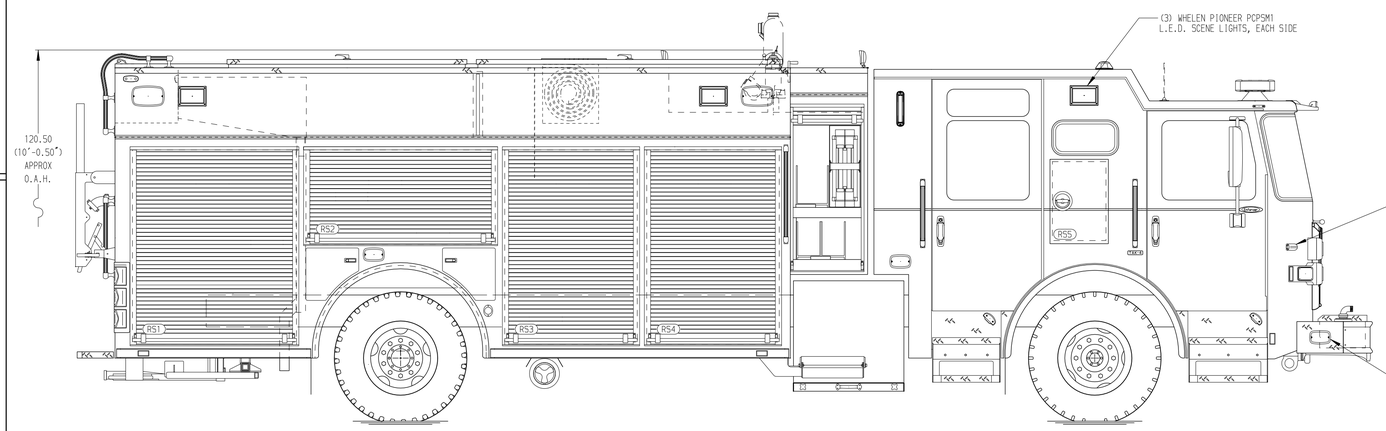

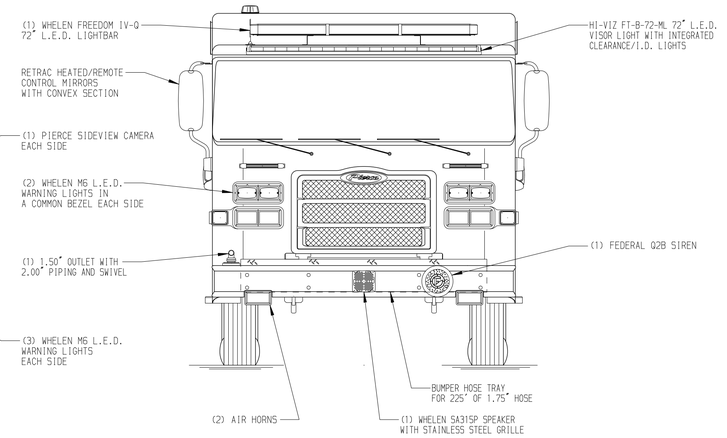

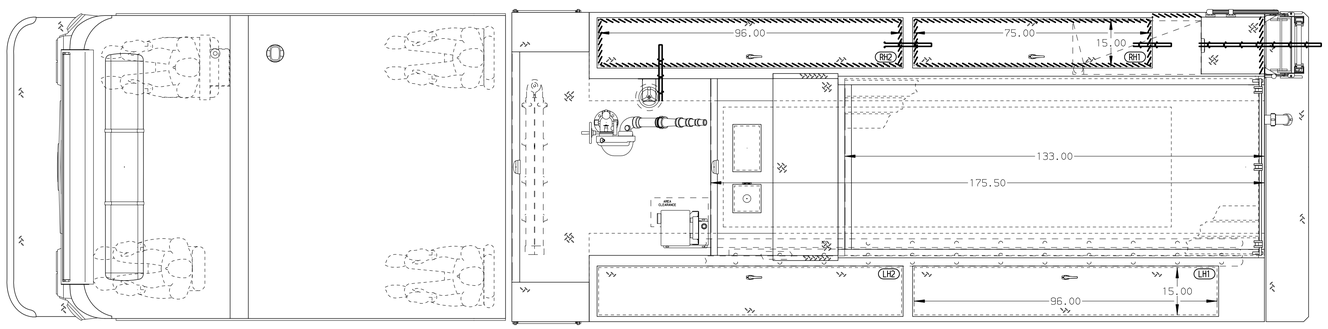

HOSEBED CAPACITIES
1. 600' OF 5.00" D.J. POLY HOSE
2. 200' OF 3.00" D.J. POLY HOSE
3. 800' OF 2.50" D.J. POLY HOSE

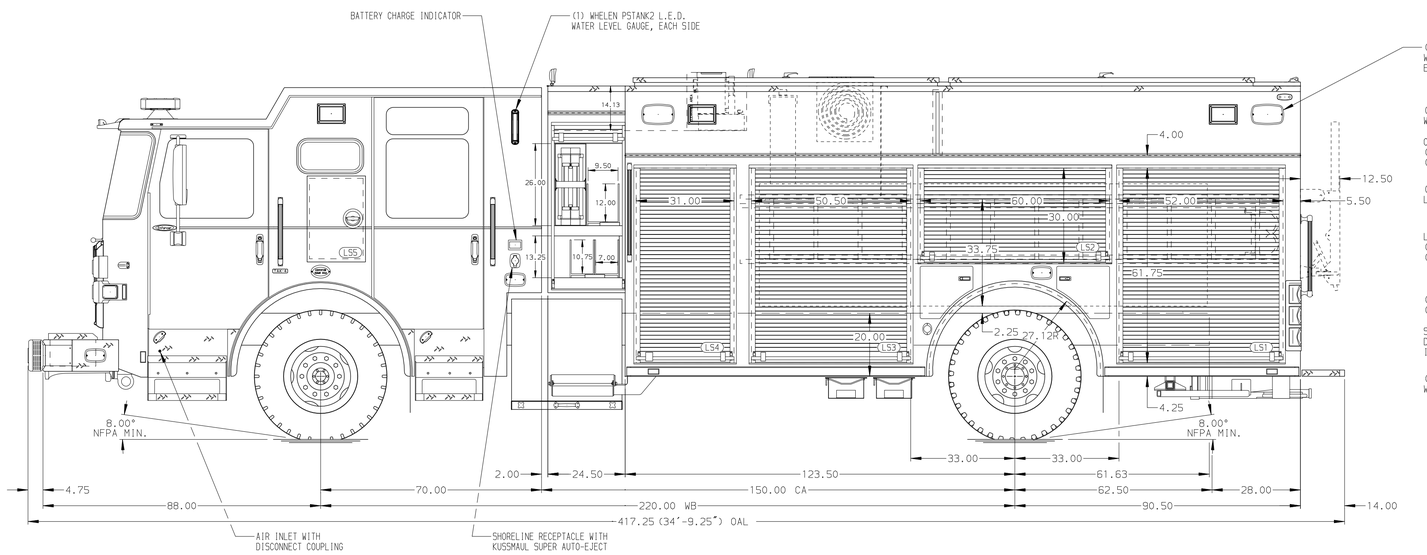

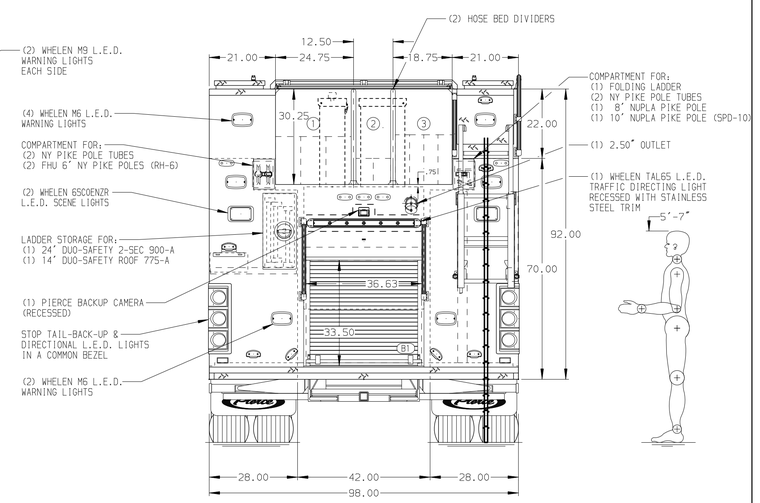

NOTE

DIMENSIONS SHOWN ARE APPROXIMATE AND ARE SUBJECT TO MINOR DEVIATIONS AS MAY OCCUR OR BE NECESSARY IN CONSTRUCTION.
MINOR DETAILS NOT SHOWN.

1. DUAL L.E.D. LIGHT STRIPS LOCATED IN HOSE BED
2. ONSPOT AUTOMATIC TIRE CHAINS TO BE PROVIDED AT REAR
3. BATTERY CHARGER LOCATED PER ORDER
4. SEVEN FULL WIDTH/DEPTH ADJUSTABLE SHELVES LOCATED PER ORDER
5. TWO ADJUSTABLE SLIDE-OUT TRAYS LOCATED PER ORDER
6. SIX FLOOR MOUNTED SLIDE-OUT TRAYS LOCATED PER ORDER
7. ONE CTECH CABINET LOCATED PER ORDER
8. TWO SLIDE-OUT TOOLBOARDS WITH PAC TRAC MOUNTING TRACKS LOCATED PER ORDER
9. ONE ADJUSTABLE VERTICAL PARTITION LOCATED PER ORDER
10. PAC TRAC OT BE LOCATED PER ORDER
11. EIGHT 120V RECEPTACLES TO BE PROVIDED PER ORDER
12. 200LB OIL DRY HOPPER TO BE LOCATED ABOVE RS1

REV	DATE	BY	CH
E	17DEC25	JDA	SJS
D	17DEC25	JDA	SJS
C	10NOV25	JDA	SJS
B	30JUN25	JDA	SJS
A	27MAY25	JDA	SJS

CHASSIS DATA
MAKE: PIERCE
MODEL: ENFORCER

Pierce MANUFACTURING INC.

TITLE: Pierce Pumper Approval Drawing
FOR: City of Winona Fire Department
DWG NO.: 39889AD

JOB NO.	39889
SCALE	1:24
DRAWN BY	JDA
DATE	11APR25
CHECKED BY	MMF
DATE	11APR25
SHEET SIZE	D
SHEET NO.	1 OF 1

View File Created 17-DEC-2025 14:50:48