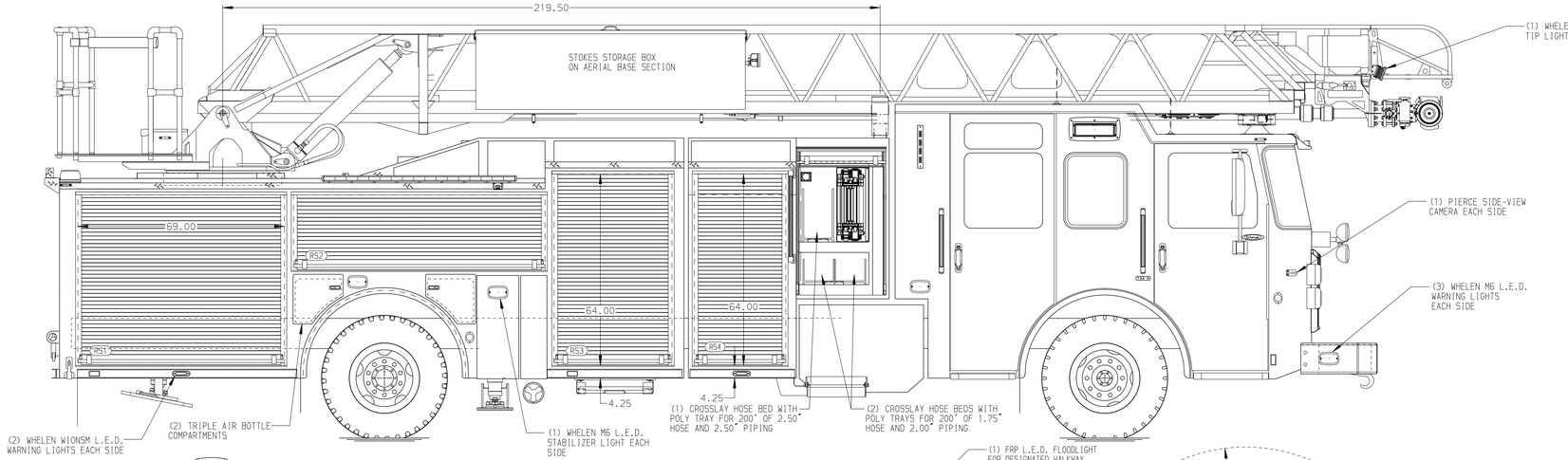

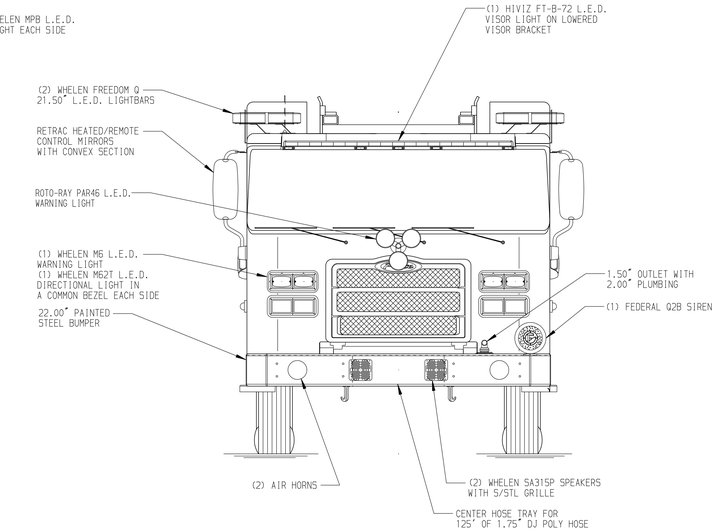

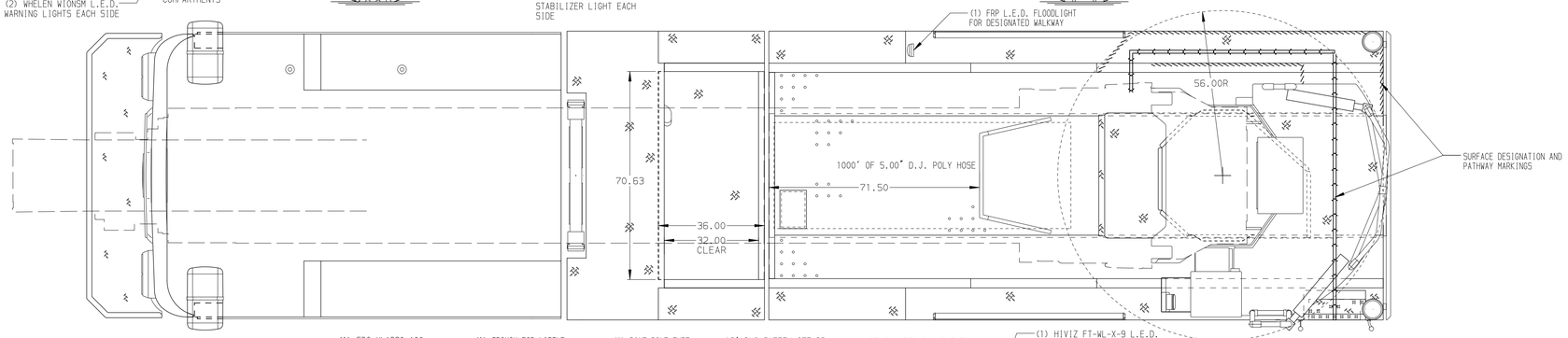

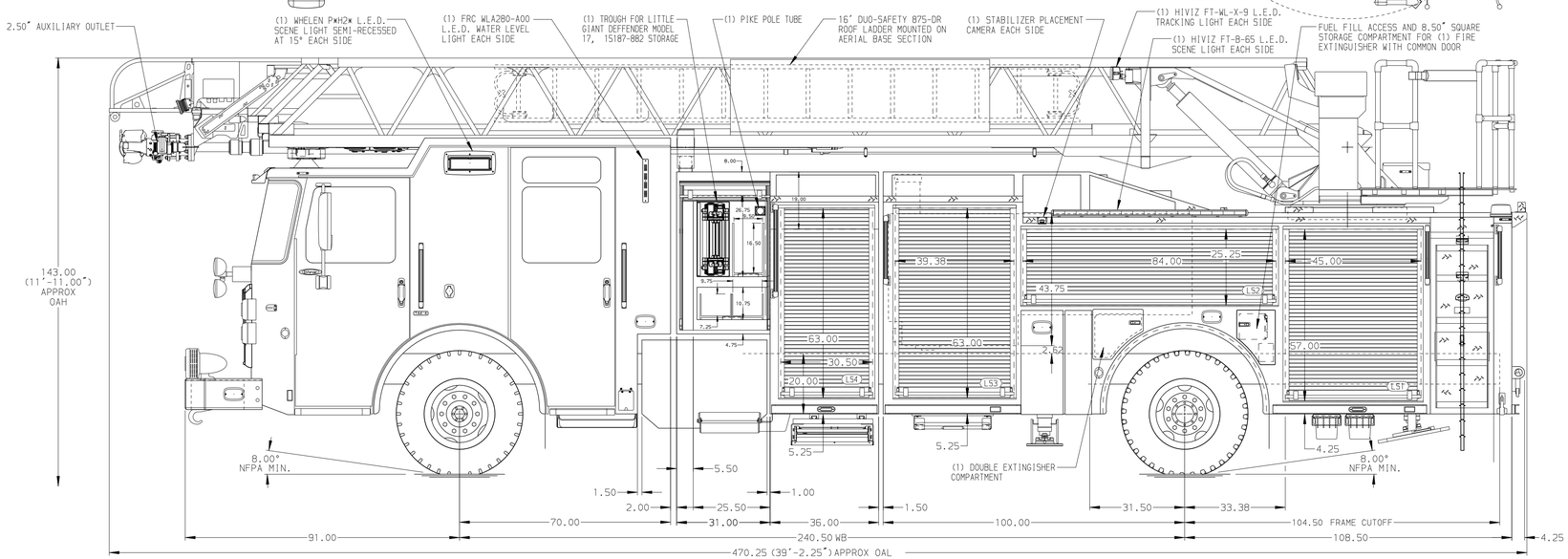

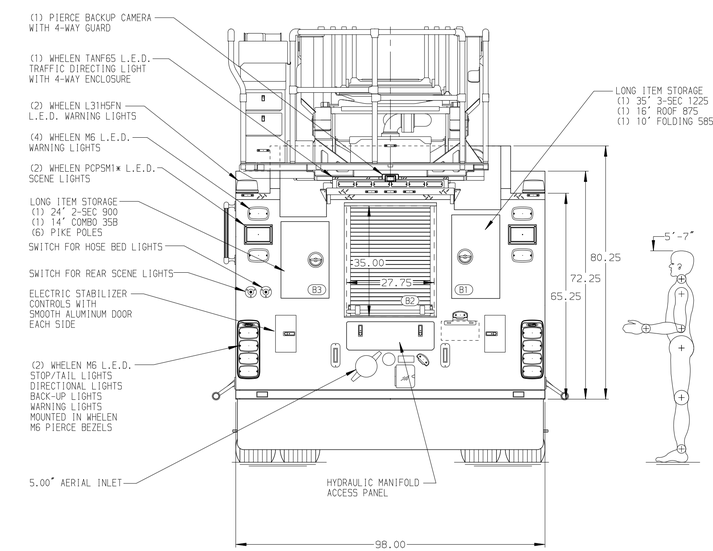

ALUMINUM BODY

MAXIMUM O.A.L. = 39'-3.00" (471.00")

NOTE

DIMENSIONS SHOWN ARE APPROXIMATE AND ARE SUBJECT TO MINOR DEVIATIONS AS MAY OCCUR OR BE NECESSARY IN CONSTRUCTION.
MINOR DETAILS NOT SHOWN.

1. NO LIMITED RETRACTION REQUIRED
2. ONE 1.50 OUTLET WITH 2.00 PIPING AND SWIVEL LOCATED IN CENTER BUMPER TRAY
3. SHORELINE RECEPTACLE WITH KUSSMAUL SUPER AUTO-EJECT LOCATED ON DRIVER SIDE OF THE CAB
4. AIR INLET/OUTLET WITH DISCONNECT FITTING & 1/4 TURN VALVE AT DRIVER SIDE PUMP PANEL
5. BATTERY CHARGER/COMPRESSOR LOCATED BEHIND OFFICER'S SEAT
6. BATTERY CHARGE INDICATOR LOCATED ON DRIVER SEAT RISER
7. ELEVEN ADJUSTABLE SHELVES LOCATED IN COMPARTMENTS PER ORDER
8. FIVE FLOOR MOUNTED SLIDE-OUT TRAYS LOCATED IN COMPARTMENTS PER ORDER
9. ONE SWING-OUT TOOLBOARD LOCATED IN COMPARTMENT PER ORDER
10. ONE PEGBOARD MOUNTED TO COMPARTMENT BACK-WALL LOCATED PER ORDER
11. FOUR RECEPTACLES LOCATED PER ORDER
12. MICROPHONE & SPEAKER BOX LOCATED AT PUMP PANEL
13. TECNIQ 4-SECTION RUNG LIGHTING AT AERIAL DEVICE
14. WIRELESS CAMERA SYSTEM LOCATED AT AERIAL EGRESS
15. LIFTING EYE ROPE RESCUE ATTACHMENT AT AERIAL TIP
16. 1500 GPM HIGH FLOW WATERWAY

REV	DATE	BY	CH
V	22OCT25	ANZ	COS
V	22SEP25	ANZ	MCJ
V	07AUG25	ZMI	BYO
V	06AUG25	ANZ	MCJ
V	08MAY25	ANZ	BYO

CHASSIS DATA
MAKE: PIERCE
MODEL: ENFORCER

Pierce MANUFACTURING INC.

TITLE: 107' ASCENDANT AERIAL LADDER AND BODY ASSEMBLY
500 GALLON WATER TANK

FOR: CITY OF BROUSSARD
BROUSSARD, LA

DWG NO.: 39899AD

JOB NO.	39899
SCALE 1:24	DATE
DRAWN BY ANZ	3MAY25
CHECKED BY BYO	-
SHEET SIZE D	SHEET NO. 1 OF 1

View File Created 23-OCT-2025 07:12:28