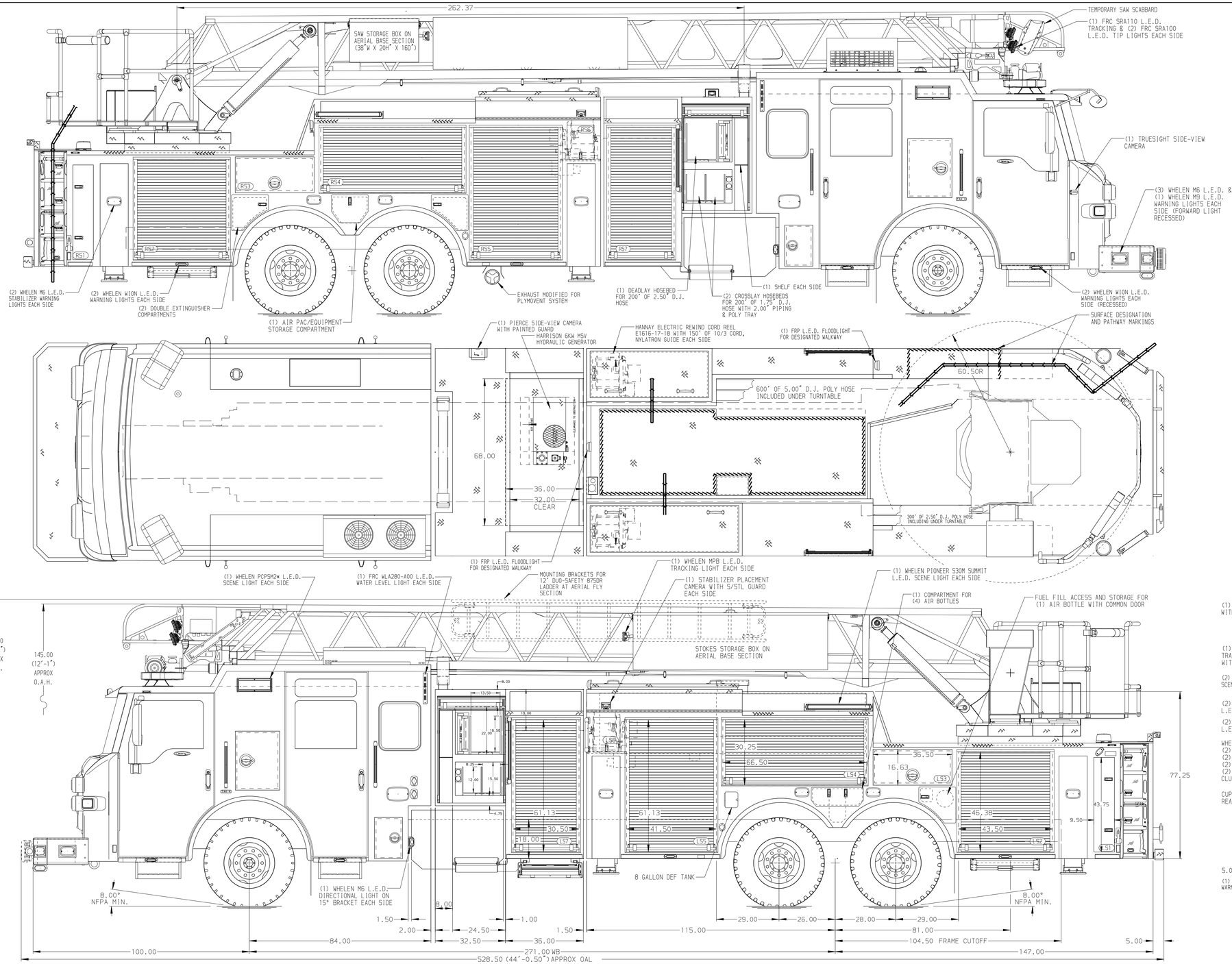

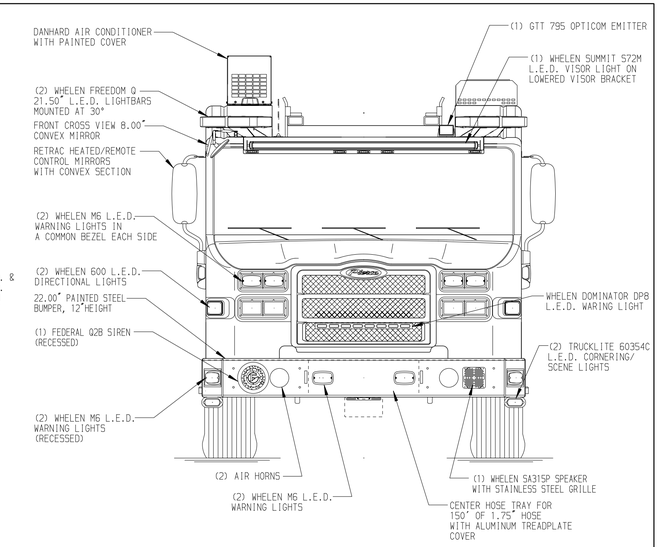

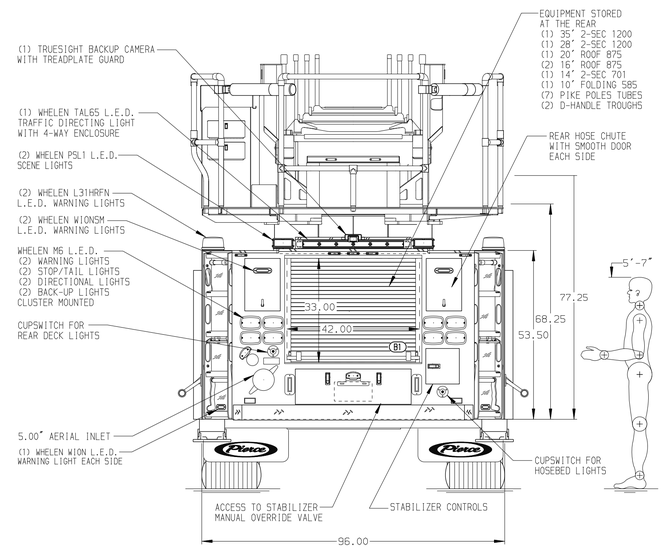

ALUMINUM BODY

SIDE ROLL AND FRONTAL IMPACT PROTECTION

NOTE

DIMENSIONS SHOWN ARE APPROXIMATE AND ARE SUBJECT TO MINOR DEVIATIONS AS MAY OCCUR OR BE NECESSARY IN CONSTRUCTION.
MINOR DETAILS NOT SHOWN.

1. NO AERIAL LIMITED RETRACTION REQUIRED
2. ONE 1.50 OUTLET WITH 2.00 PIPING AND SWIVEL LOCATED IN CENTER BUMPER TRAY
3. SHORELINE RECEPTACLE WITH KUSSMAUL AUTO-EJECT LOCATED REAR OF CREW CAB DOOR
4. AIR INLET/OUTLET WITH DISCONNECT FITTING IN THE DRIVER SIDE STEPWELL
5. BATTERY CHARGER LOCATED PER ORDER
6. ONE FIXED SHELF LOCATED IN COMPARTMENT PER ORDER
7. FIVE ADJUSTABLE SHELVES LOCATED IN COMPARTMENTS PER ORDER
8. TWO FLOOR MOUNTED SLIDE-OUT TRAYS LOCATED IN COMPARTMENTS PER ORDER
9. FOUR SLIDE-OUT TOOLBOARDS LOCATED IN COMPARTMENTS PER ORDER
10. ONE CTECH THREE-DRAWER CABINET LOCATED IN COMPARTMENT PER ORDER
11. ONE CIRCUIT BREAKER PANEL LOCATED IN COMPARTMENT PER ORDER
12. FIVE RECEPTACLES LOCATED PER ORDER
13. TWO TILT/SLIDE-OUT TRAYS LOCATED IN COMPARTMENTS PER ORDER
14. ONE AIR BAG RACK LOCATED IN COMPARTMENT PER ORDER
15. TECNIQ 4-SECTION RUNG LIGHTING AT AERIAL DEVICE
16. PIERCE CAMERA DISPLAY AT PUMP PANEL
17. 3-in-1 LYFECOMBO BRACKETS AT AERIAL BASKET
18. 3.00" RAISED AERIAL PEDESTAL

REV	DATE	BY	CH
4	170CT25	ANZ	COS
3	08OCT25	ANZ	COS
2	19AUG25	ANZ	MCJ
1	25APR25	ANZ	BYO

CHASSIS DATA: MAKE PIERCE; MODEL VELOCITY

Pierce MANUFACTURING INC.

TITLE: 107' ASCENDANT AERIAL LADDER AND BODY ASSEMBLY
500 GALLON WATER TANK

FOR: GRAPEVINE FIRE DEPARTMENT
GRAPEVINE, TX

DWG NO.: 39904AD

JOB NO.	39904
SCALE	1:24
DATE	
DRAWN BY	ANZ
18APR25	
CHECKED BY	BYO
-	
SHEET SIZE	D
SHEET NO.	1 OF 1

View File Created 28-OCT-2025 12:07:48