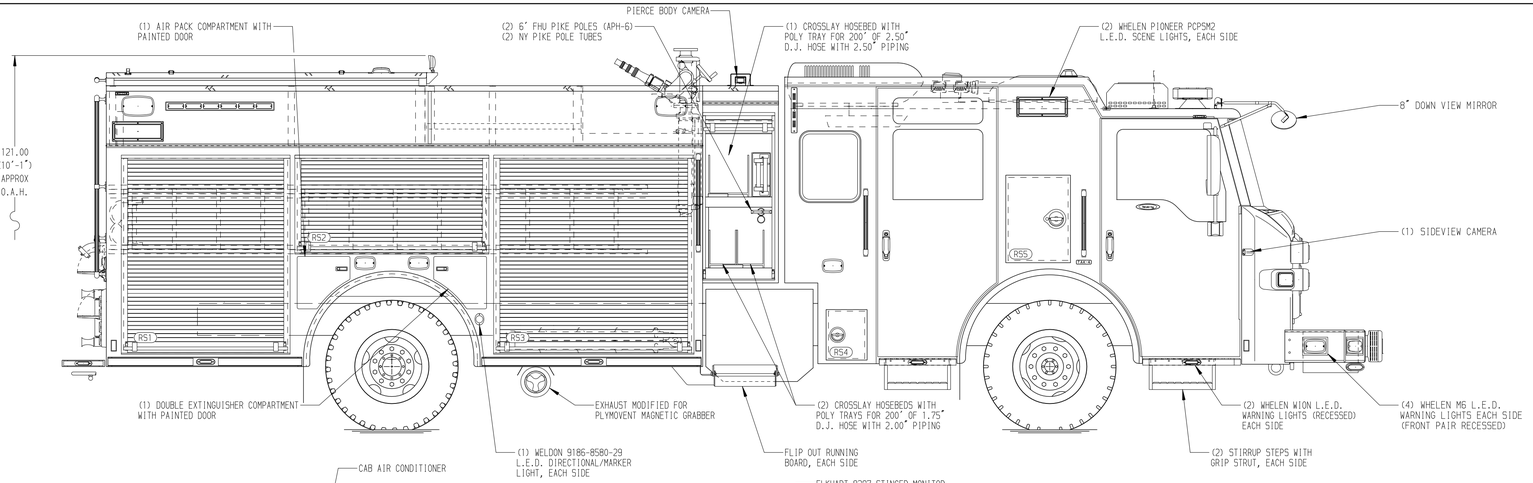

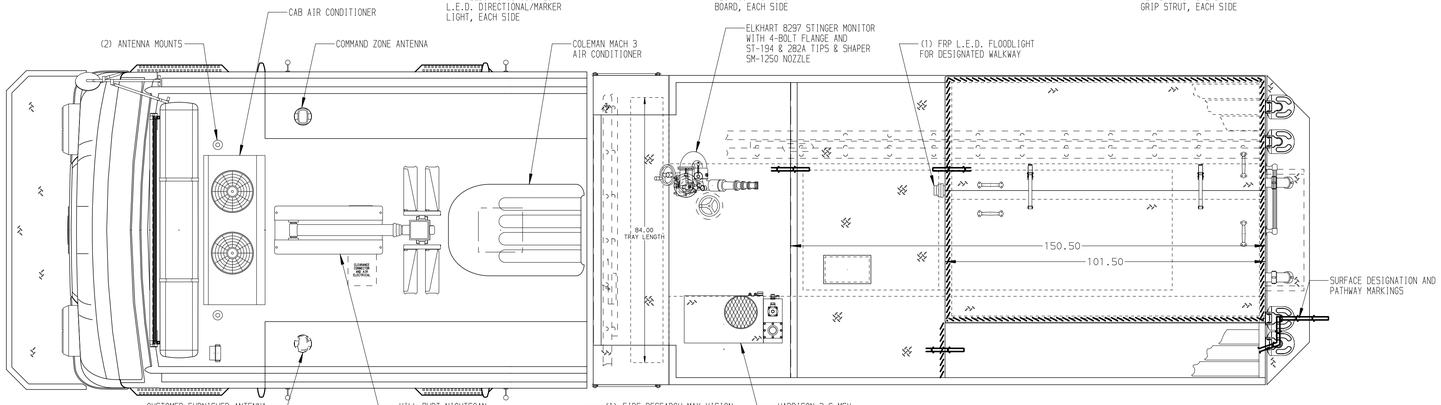

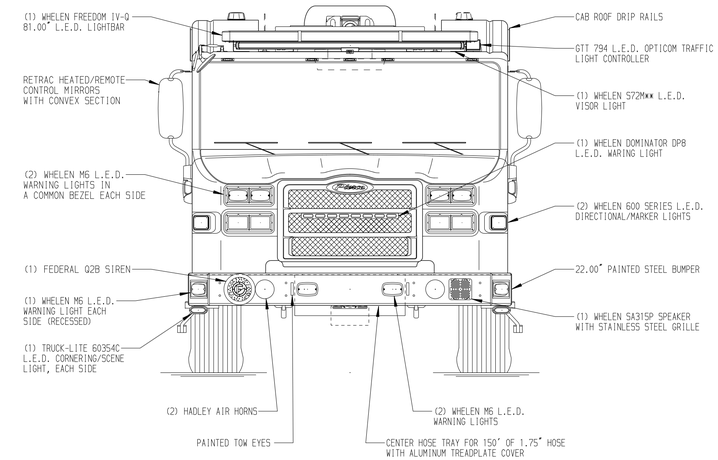

HOSEBED CAPACITIES

1. 300' OF 2.50" D.J. POLY HOSE
2. 1000' OF 5.00" D.J. POLY HOSE
3. 300' OF 3.00" D.J. POLY HOSE

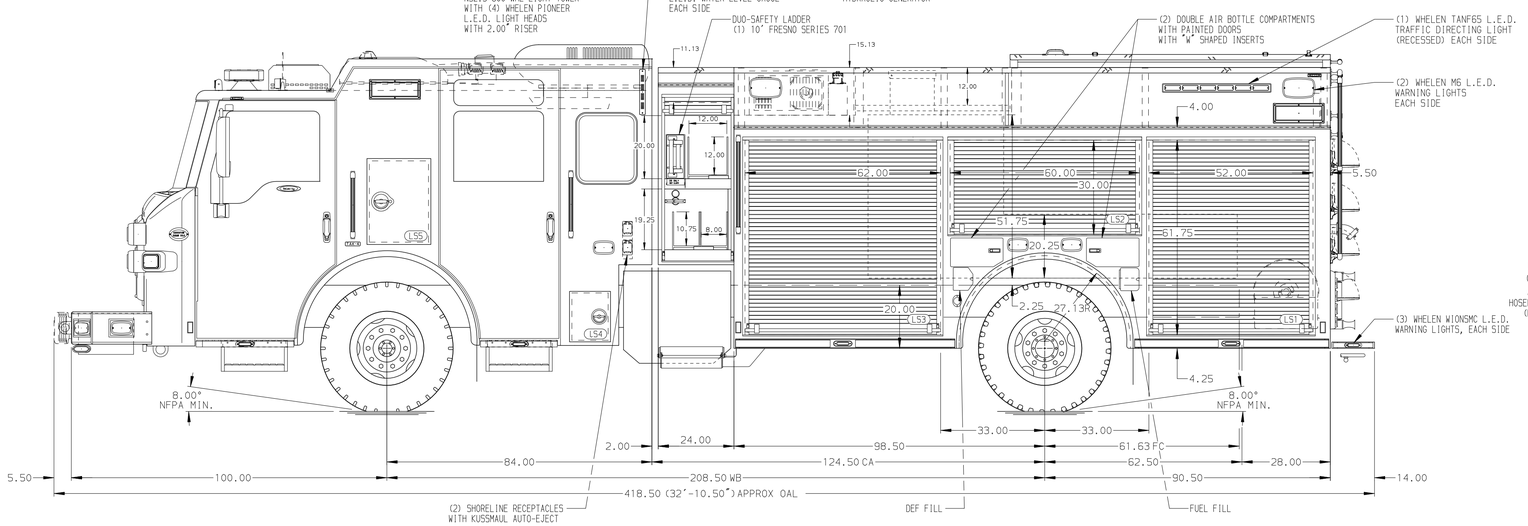

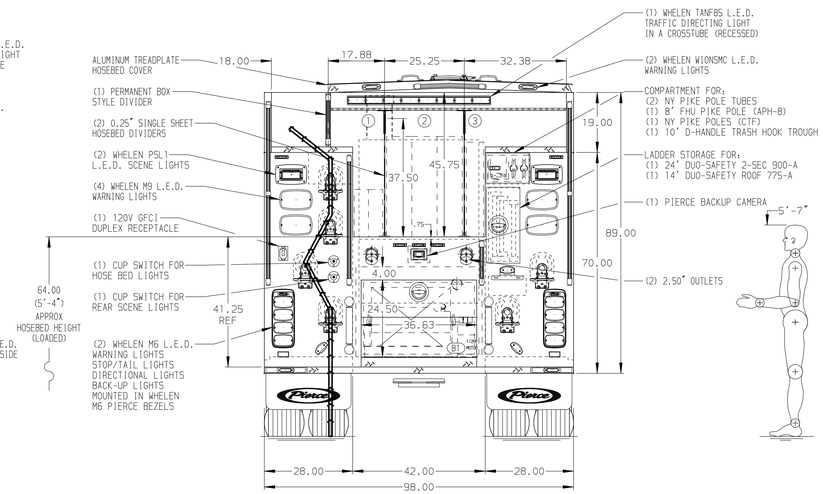

ALUMINUM BODY

SIDE ROLL AND FRONTAL IMPACT PROTECTION

NOTE

DIMENSIONS SHOWN ARE APPROXIMATE AND ARE SUBJECT TO MINOR DEVIATIONS AS MAY OCCUR OR BE NECESSARY IN CONSTRUCTION.
MINOR DETAILS NOT SHOWN.

1. ONE 1.50 OUTLET WITH 2.00 PIPING AND SWIVEL LOCATED IN CENTER BUMPER TRAY
2. ONSPOT AUTOMATIC TIRE CHAINS TO BE PROVIDED AT REAR
3. AIR INLET/OUTLET WITH DISCONNECT COUPLING IN THE DRIVER SIDE STEPWELL
4. ADDITIONAL AIR TANK TO BE LOCATED PER ORDER
5. BATTERY CHARGER LOCATED PER ORDER
6. BATTERY CHARGE INDICATOR LOCATED ON DRIVER SIDE STEPWELL
7. WHEEL CHOCKS AND MOUNTING BRACKETS TO BE PROVIDED BY CUSTOMER
8. DUAL L.E.D. LIGHT STRIPS LOCATED IN HOSE BED
9. L.E.D. LIGHT STICK LOCATED AT THE FRONT OF HOSEBED
10. HANNAY BOOSTER HOSE REEL MODEL SBEF32-21-22-8 WITH CAPACITY FOR 200' OF 1.00" BOOSTER HOSE

REV	DATE	BY	CH
3	25AUG25	JDA	MCJ
2	30JUL25	JDA	MCJ
1	25APR25	JDA	WKL

CHASSIS DATA
MAKE: PIERCE
MODEL: VELOCITY FR

Pierce MANUFACTURING INC.

TITLE: 1500 GPM, 500G WATERTANK 189" PUC, MUX
FOR: GRAPEVINE FIRE DEPARTMENT GRAPEVINE, TEXAS
DWG NO.: 39906AD-SH1

JOB NO.	39906
SCALE	1:24
DATE	
DRAWN BY	JDA 22APR25
CHECKED BY	WKL 22APR25
SHEET SIZE	D
SHEET NO.	1 OF 2

View File Created 25-AUG-2025 11:20:35