PUMPER

BODY
Long Aluminum 2nd Gen Pumper

CHASSIS
Enforcer Chassis

CHASSIS

AXLE, FRONT, CUSTOM
19,500 lb TAK-4 Axle

AXLE, REAR
27,000 lb Meritor Axle

ENGINE
510 HP Paccae MX13 Engine

TRANSMISSION
Allison 6th Gen, 4000 EVS P

BUMPER
22" Extended Painted Steel

CAB
7010 Enforcer Cab

BODY

TOTAL TANK CAPACITY
750 Gallon New York Style Poly Tank

WATER CAPACITY
750 Gallons of Water

FOAM CELL
Foam Cell Not Required

COMPT, PUMPER, REAR
30.75" FF Rollup Rear Compt

COMPT, PUMPER, LEFT SIDE
161" Rollup Full Height Front & Rear FDLER

COMPT, PUMPER, RIGHT SIDE
161" Rollup Low FDLER

FIRE SUPPRESSION

PUMPHOUSE
52" Side Control

PUMP
1500 GPM Waterous CSU

CROSSLAYS, 1.50"
(2) 1.50" Standard Capacity

CROSSLAYS, 2.50"
2.50" Crosslay Not Required

SPEEDLAYS
Speedlays Not Required

GENERATOR
Generator Not Required

FOAM SYSTEM
Foam System Not Required

SAFETY

Side Roll and Frontal Impact Protection

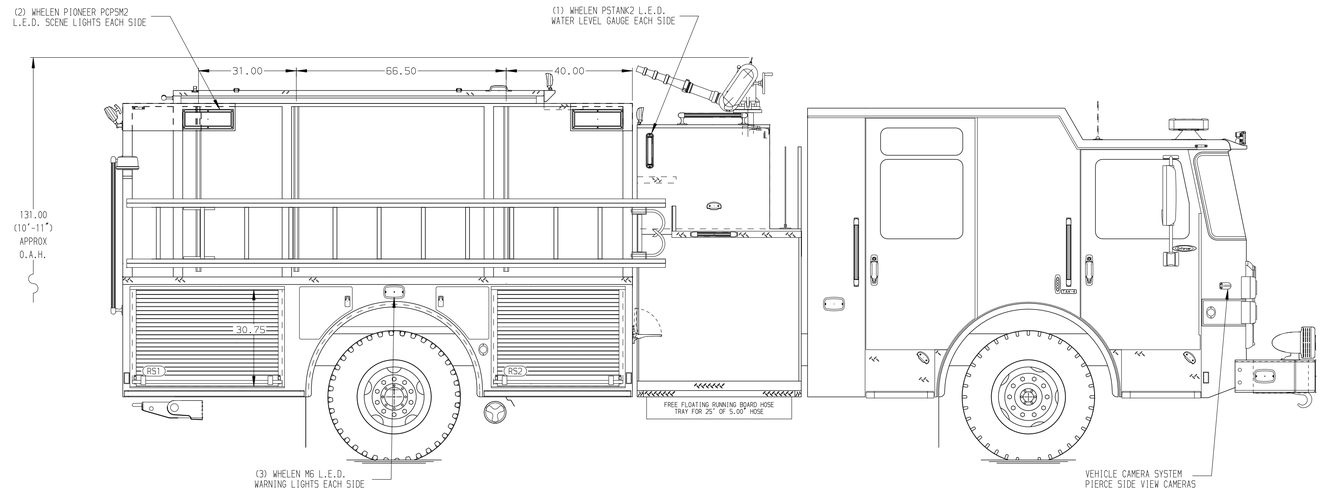

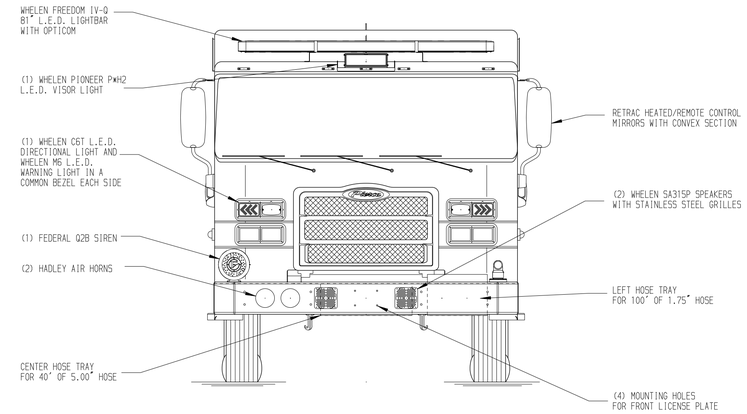

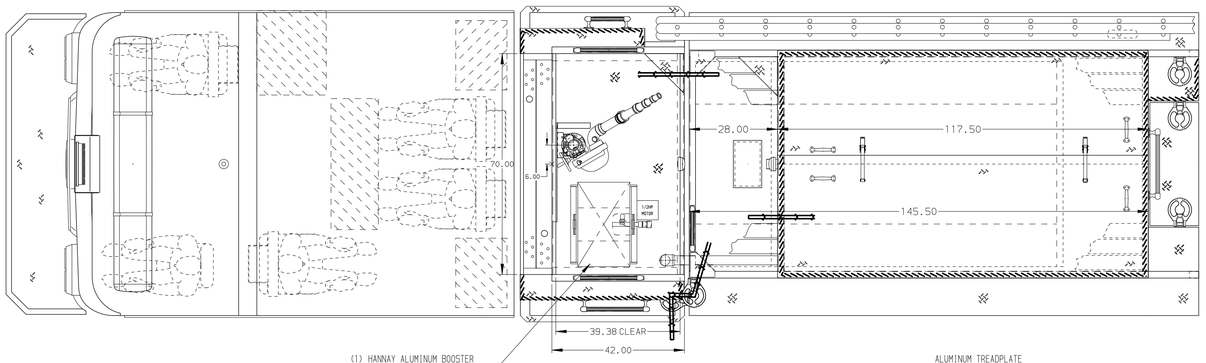

HOSEBED CAPACITY

BED 1
200' OF 2.50" D.J. POLY HOSE

BED 2
1000' OF 5.00" D.J. POLY HOSE

BED 3
1000' OF 3.00" D.J. POLY HOSE

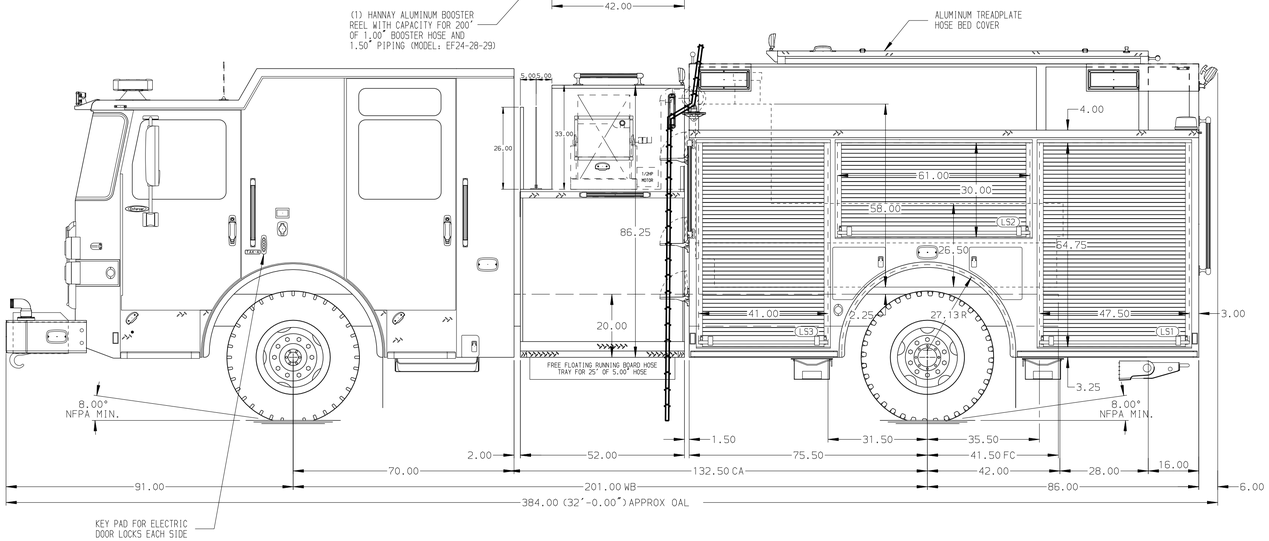

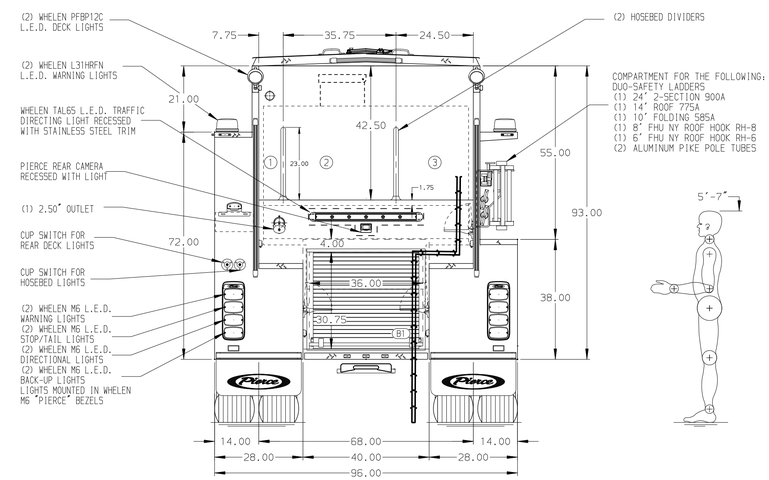

NOTE

DIMENSIONS SHOWN ARE APPROXIMATE AND ARE SUBJECT TO MINOR DEVIATIONS AS MAY OCCUR OR BE NECESSARY IN CONSTRUCTION.
MINOR DETAILS NOT SHOWN.

1. ONE 2.50 OUTLET WITH 2.50 PIPING AND SWIVEL LOCATED LS ON TOP OF BUMPER
2. SHORELINE RECEPTACLE WITH KUSSMAUL SUPER AUTO-EJECT LOCATED ON DRIVER SIDE OF THE CAB
3. AIR INLET WITH DISCONNECT COUPLING IN THE DRIVER SIDE STEPWELL
4. BATTERY CHARGER LOCATED PER ORDER
5. BATTERY CHARGE INDICATOR LOCATED ON DRIVER SIDE OF THE CAB
6. SIX ADJUSTABLE SHELVES LOCATED PER ORDER
7. ONE FLOOR MOUNTED SLIDE-OUT TRAY LOCATED PER ORDER
8. PACCAR DEF TANK MOUNTED UNDER CAB ON THE DRIVER'S SIDE
9. ONE CTECH DRAWER ASSEMBLY LOCATED PER SHOP ORDER
10. ONE SWING-OUT TOOLBOARD WITH PAC TRAC LOCATED PER SHOP ORDER
11. PAC TRAC LOCATED ON THE BACK WALLS OF COMPARTMENTS PER SHOP ORDER

REV	DATE	BY	CH
3	07JAN25	JJB	CHR
2	21OCT24	JJB	CHR
1	05SEP24	JJB	CHR

CHASSIS DATA
MAKE: PIERCE
MODEL: ENFORCER

Pierce MANUFACTURING INC.

TITLE: Pierce Pumper Approval Drawing
–
FOR: Odessa Fire Department
–
DWG NO.: 39930AD

JOB NO.: 39930 01-02
SCALE: 1:24
DATE: 07JUN24
DRAWN BY: JJB
CHECKED BY: MMF
SHEET SIZE: D
SHEET NO.: 1 OF 1

View File Created 08-JAN-2025 09:43:27