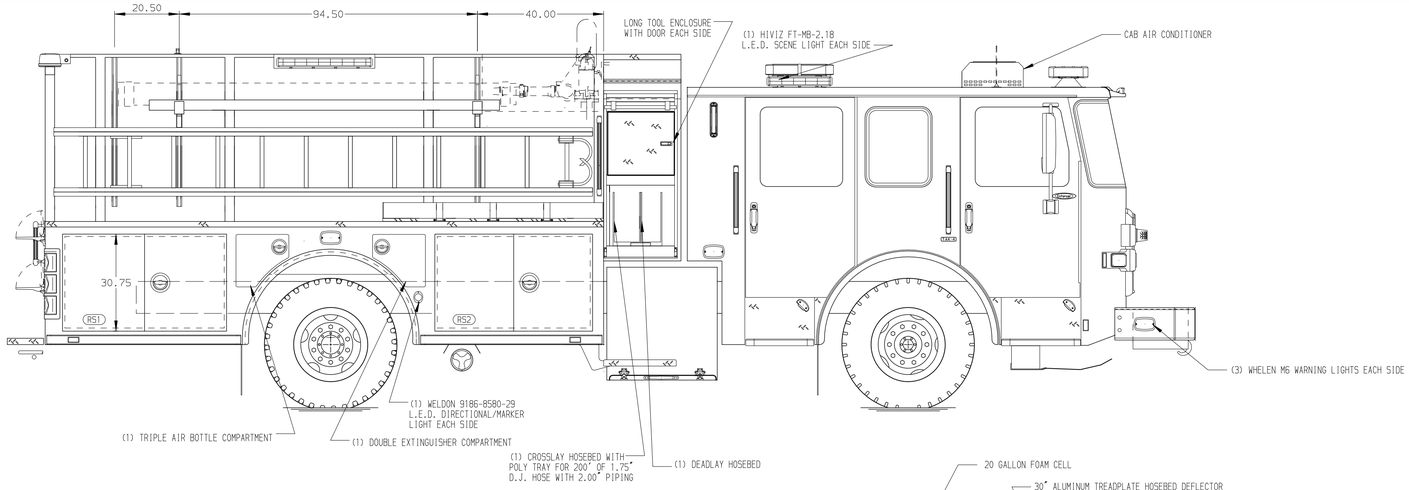

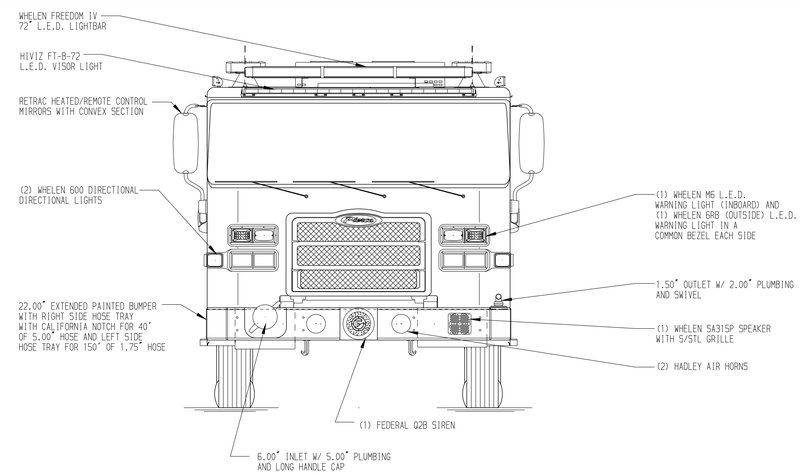

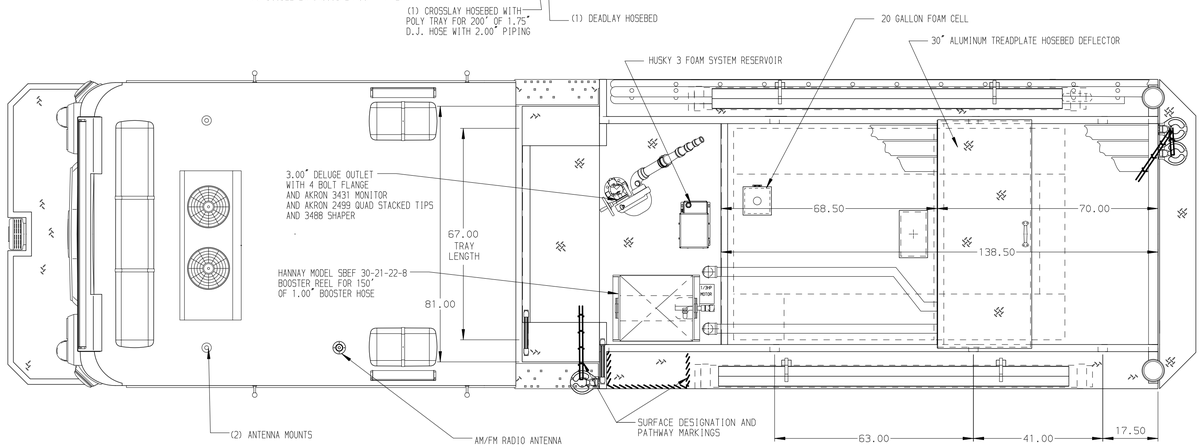

HOSEBED CAPACITIES

1. 200' OF 2.50" D.J. POLY HOSE
2. 200' OF 2.50" D.J. POLY HOSE
3. 1000' OF 4.00" D.J. POLY HOSE
4. 300' OF 1.75" D.J. POLY HOSE
5. 200' OF 1.75" D.J. POLY HOSE

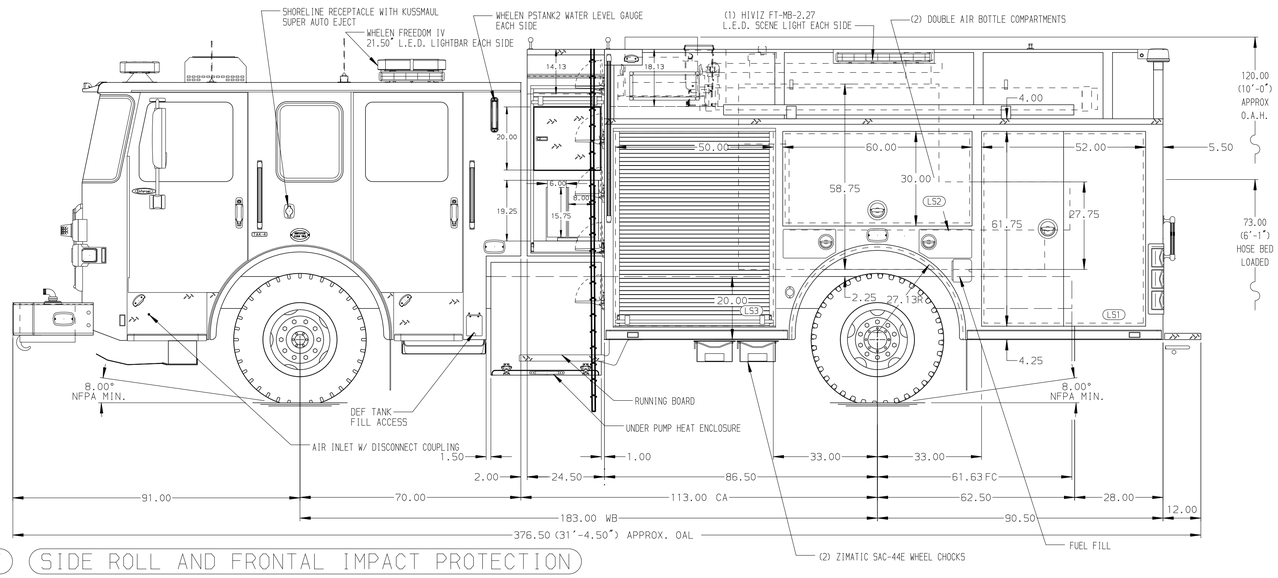

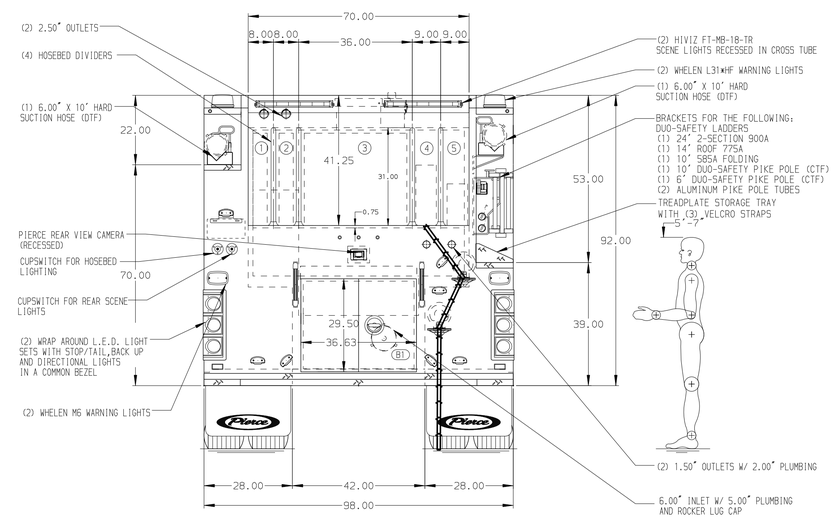

ALUMINUM BODY

SIDE ROLL AND FRONTAL IMPACT PROTECTION

NOTE

DIMENSIONS SHOWN ARE APPROXIMATE AND ARE SUBJECT TO MINOR DEVIATIONS AS MAY OCCUR OR BE NECESSARY IN CONSTRUCTION.
MINOR DETAILS NOT SHOWN.

1. ROTO GRIP AUTOMATIC TIRE CHAINS TO BE PROVIDED AT THE REAR
2. BATTERY CHARGER/ COMPRESSOR LOCATED BEHIND THE DRIVER'S SEAT
3. BATTERY CHARGER INDICATOR LOCATED ON THE DRIVER'S SEAT RISER

REV	DATE	BY	CH
5	05NOV25	LST	MCJ
4	23SEP25	LST	MCJ
3	07JUL25	LST	SZE

CHASSIS DATA
MAKE: PIERCE
MODEL: ENFORCER

Pierce MANUFACTURING INC.

TITLE: 1500 GPM, 1020 G TANK, 1000 G WATER, 20 G FOAM CELL 177" PUC PUMPER BODY, HARD WIRED

FOR: FARMINGTON FIRE RESCUE, FARMINGTON, MAINE

DWG NO.: 39935AD

JOB NO.	SCALE	DRAWN BY	DATE	CHECKED BY	DATE	SHEET SIZE	SHEET NO.
39935	1:24	LST	23JUN25	SZE	24JUN25	D	1 OF 1

View File Created 06-NOV-2025 12:00:30