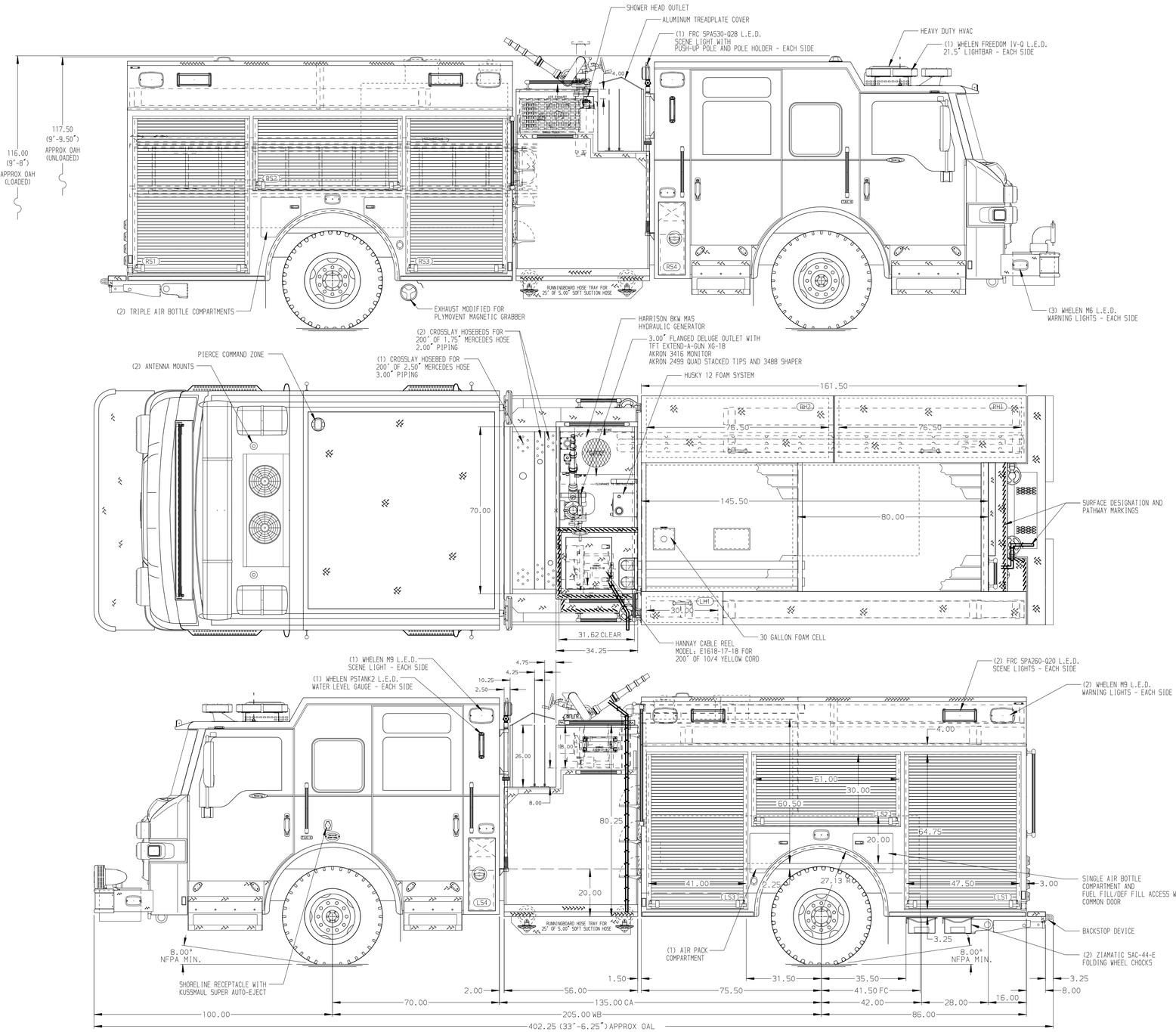

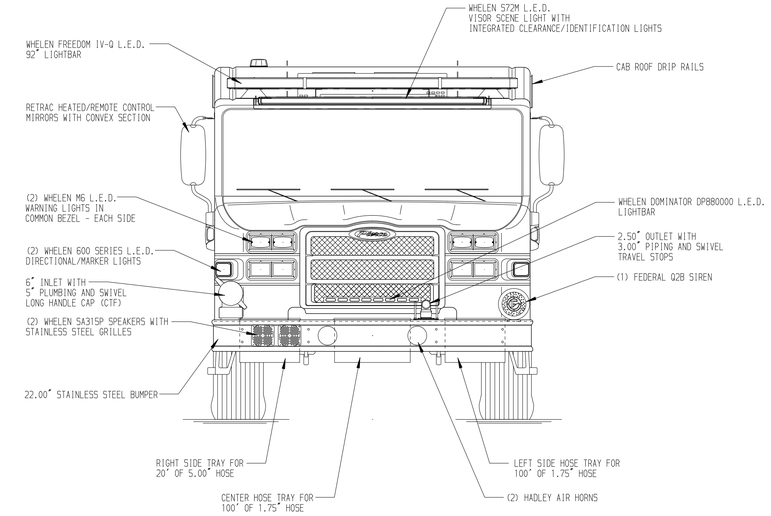

HOSEBED CAPACITIES

1. - 300' OF 1.75" MERCEDES HOSE
2. - 300' OF 2.50" MERCEDES HOSE
3. - 300' OF 2.50" MERCEDES HOSE
4. - 500' OF 3.00" MERCEDES AQUAFLOW PLUS HOSE
5. -1200' OF 5.00" MERCEDES MEGAFLOW HOSE

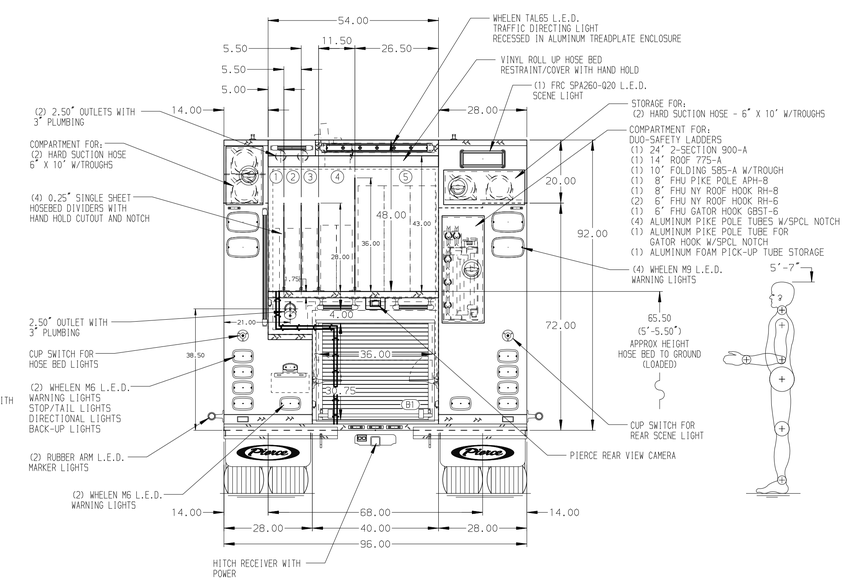

ALUMINUM BODY | MAXIMUM O.A.H. 116.00" - LOADED | SIDE ROLL AND FRONTAL IMPACT PROTECTION | REF: 29778

NOTE

DIMENSIONS SHOWN ARE APPROXIMATE AND ARE SUBJECT TO MINOR DEVIATIONS AS MAY OCCUR OR BE NECESSARY IN CONSTRUCTION.
MINOR DETAILS NOT SHOWN.

1. AIR OUTLET W/SHUT OFF VALVE LOCATED AT DRIVER'S SIDE PUMP PANEL
2. AIR COMPRESSOR WITH VENTILATED COVER LOCATED IN LH1 PER ORDER
3. BATTERY CHARGE INDICATOR LOCATED NEAR DRIVER'S SEAT PER ORDER
4. BATTERY CHARGER LOCATED IN CAB SEAT BOX PER ORDER
5. ONE 3/8" PLATE LOCATED IN RS1 PER ORDER
6. ONE EXTINGUISHER STORAGE BIN LOCATED IN LS4 PER ORDER
7. FOUR EXTINGUISHER STORAGE BINS LOCATED IN B1 PER ORDER
8. MICROPHONE AND SPEAKER ON OPERATOR PANEL PER ORDER
9. GENERATOR CIRCUIT BREAKER PANEL LOCATED IN LS3 PER ORDER
10. TWO RECEPTACLES LOCATED IN LS1 AND RS1 PER ORDER

REV	DATE	BY	CH
V	08JAN26	PHA	PHA
V	10DEC25	SAM	PHA
V	28AUG25	SAM	PHA
V	21JUL25	SAM	PHA
V	11APR25	SAM	PHA

CHASSIS DATA
MAKE: PIERCE
MODEL: VELOCITY FR

Pierce MANUFACTURING INC.

TITLE: 2000GPM, 780G TANK, 750G WATER, 30G FOAM 161" BODY, MUX
FOR: PISCATAWAY FIRE DISTRICT 4 PISCATAWAY, NEW JERSEY
DWG NO.: 39964AD

JOB NO.	39964
SCALE 1:24	DATE
DRAWN BY SAM	07APR25
CHECKED BY PHA	7APR25
SHEET SIZE D	SHEET NO. 1 OF 1

View File Created 08-JAN-2026 08:17:56