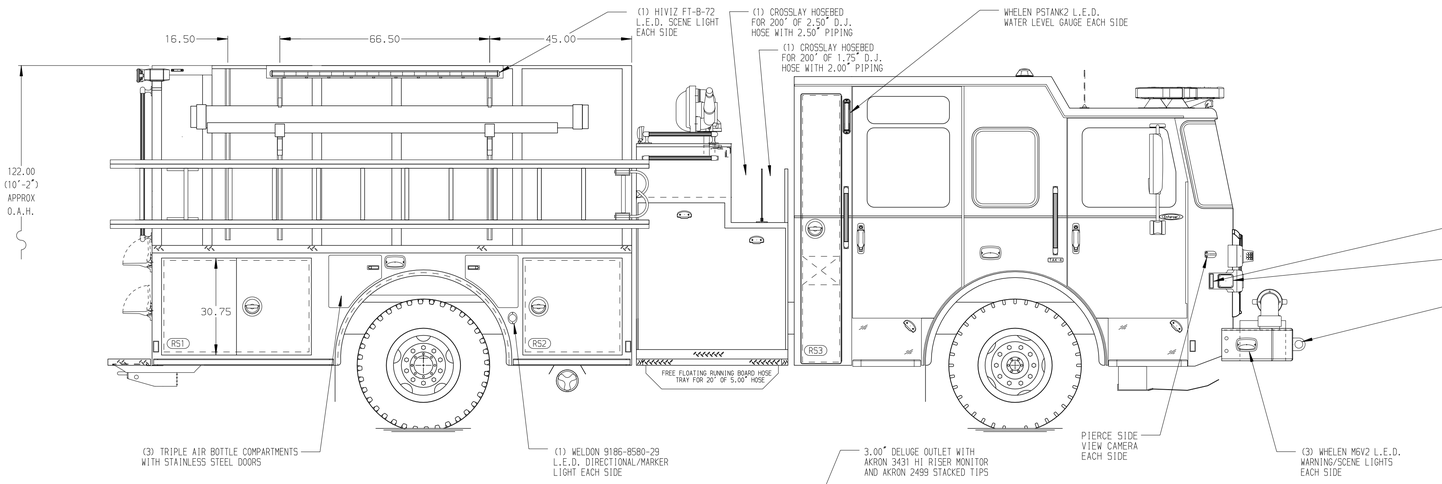

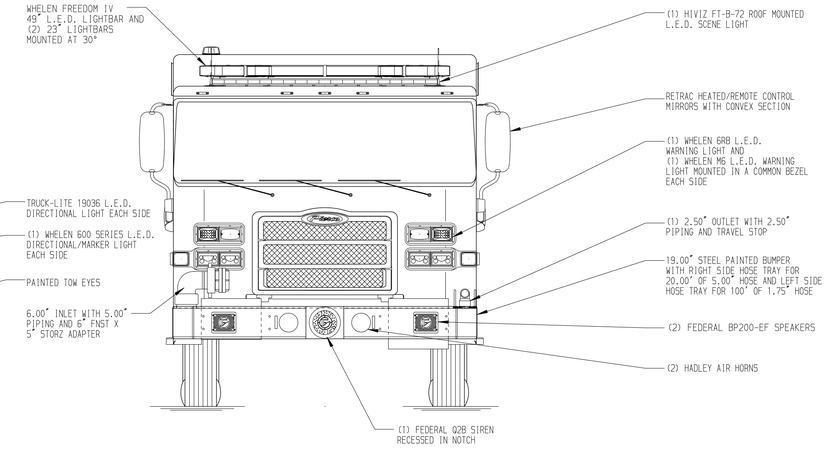

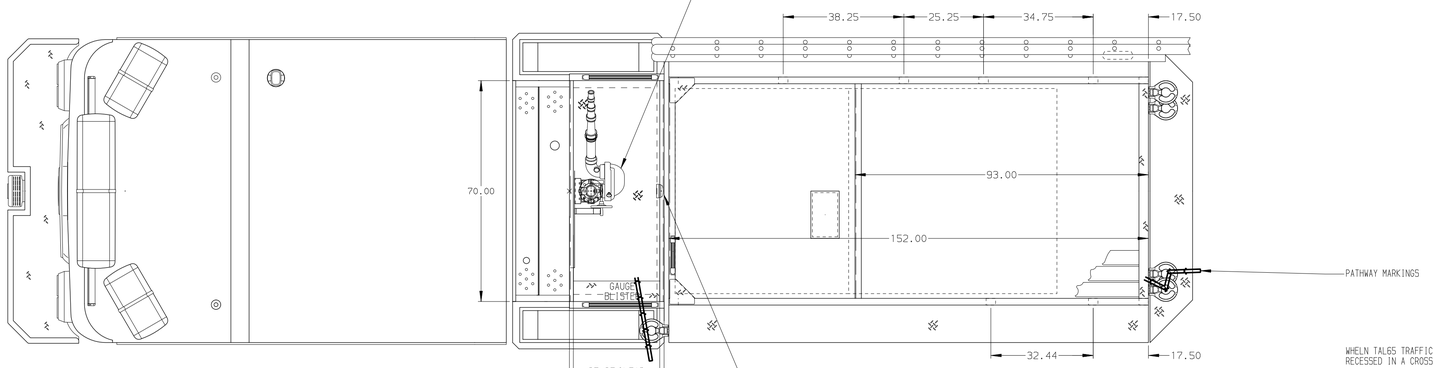

HOSEBED CAPACITIES

1. 500' OF 2.50" D.J. POLY HOSE (BOTTOM)
   300' OF 1.75" D.J. POLY HOSE (TOP)
2. 600' OF 2.50" D.J. POLY HOSE
3. 600' OF 3.00" D.J. POLY HOSE
4. 1100' OF 5.00" D.J. POLY HOSE
5. 500' OF 2.50" D.J. POLY HOSE (BOTTOM)
   300' OF 1.75" D.J. POLY HOSE (TOP)

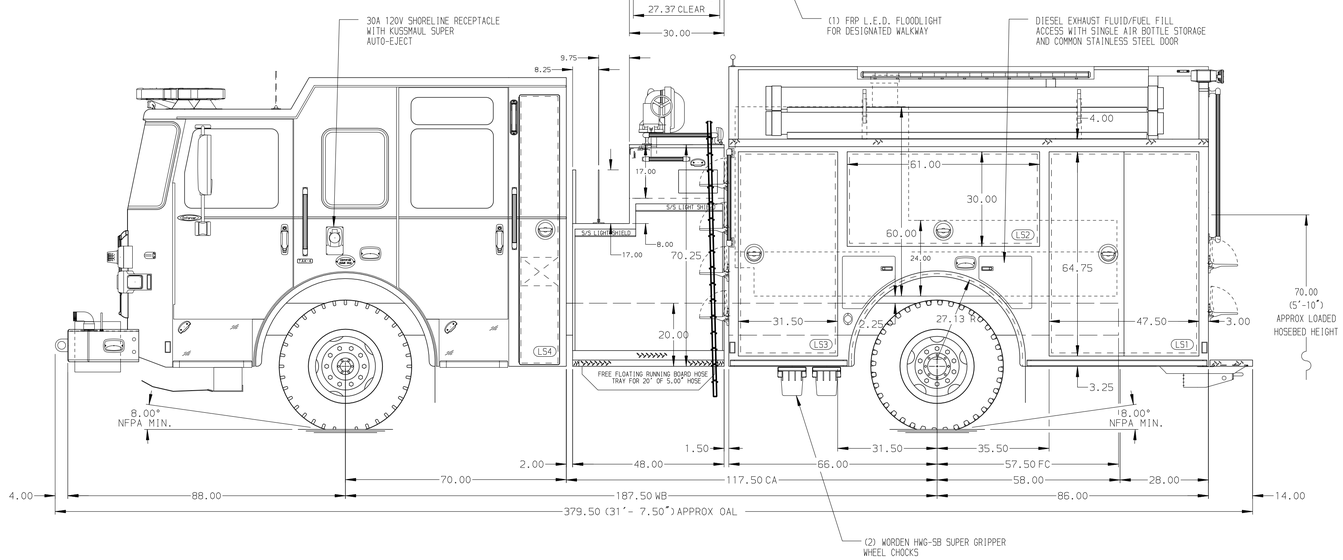

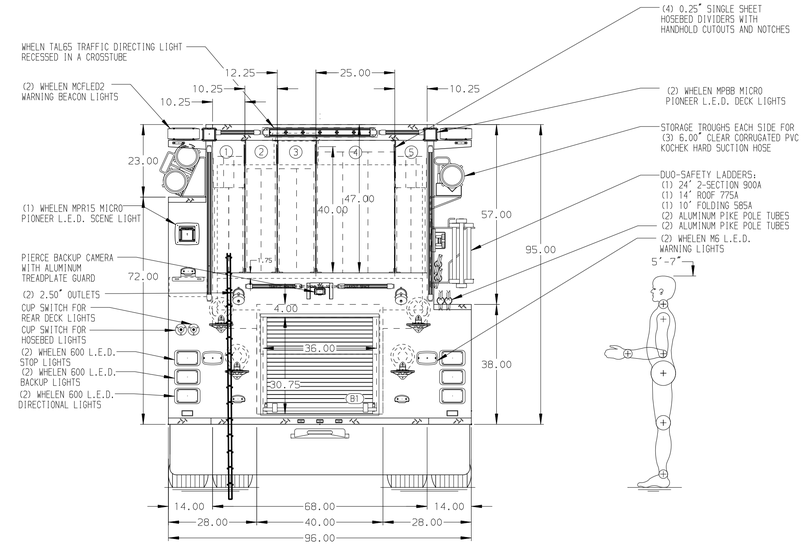

ALUMINUM BODY

SIDE ROLL AND FRONTAL IMPACT PROTECTION

NOTE

DIMENSIONS SHOWN ARE APPROXIMATE AND ARE SUBJECT TO MINOR DEVIATIONS AS MAY OCCUR OR BE NECESSARY IN CONSTRUCTION.
MINOR DETAILS NOT SHOWN.

1. ONSPOT AUTOMATIC TIRE CHAINS TO BE PROVIDED AT REAR
2. BATTERY CHARGER LOCATED BEHIND DRIVER'S SEAT
3. BATTERY CHARGER INDICATOR LOCATED ON DRIVER'S SEAT RISER

REV	DATE	BY	CH
D	21NOV25	KLE	CSH
C	07AUG25	KLE	CSH
B	17JUL25	JWR	CSH
A	30MAY25	KLE	SZE

CHASSIS DATA
MAKE: PIERCE
MODEL: ENFORCER

Pierce MANUFACTURING INC.

TITLE: 2000GPM, 1000G TANK, 1000G WATER, 0G FOAM
152" 2G PUMPER, MUX

FOR: GLENVILLE FIRE DISTRICT #5
SCOTIA, NEW YORK

DWG NO. 39966AD

JOB NO.	39966
SCALE	1:24
DATE	
DRAWN BY	KLE 22MAY25
CHECKED BY	IPR 23MAY25
SHEET SIZE	D
SHEET NO.	1 OF 1

View File Created 21-NOV-2025 12:47:21