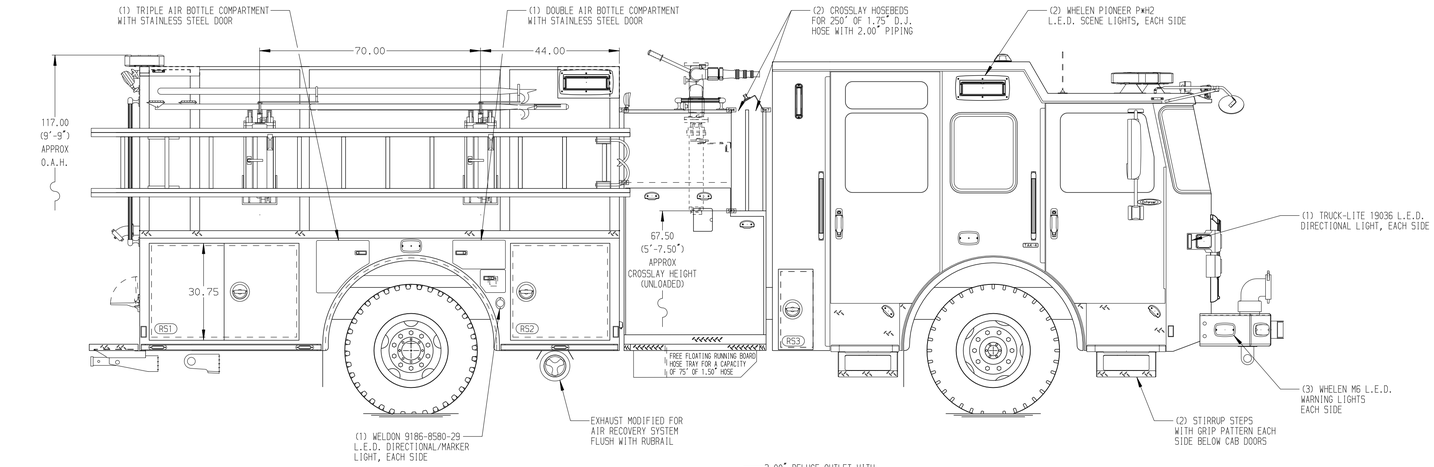

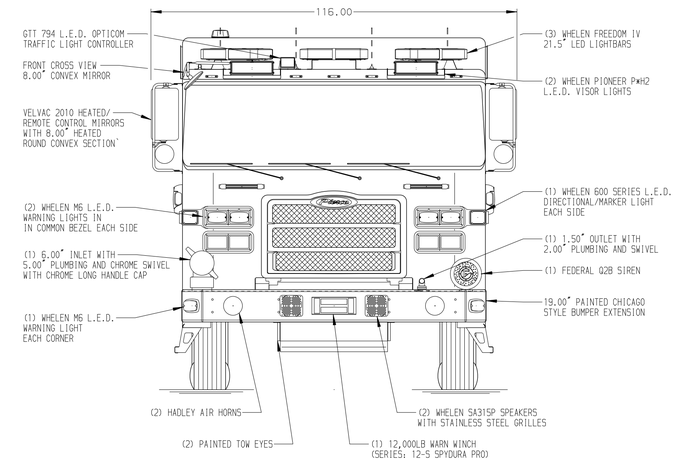

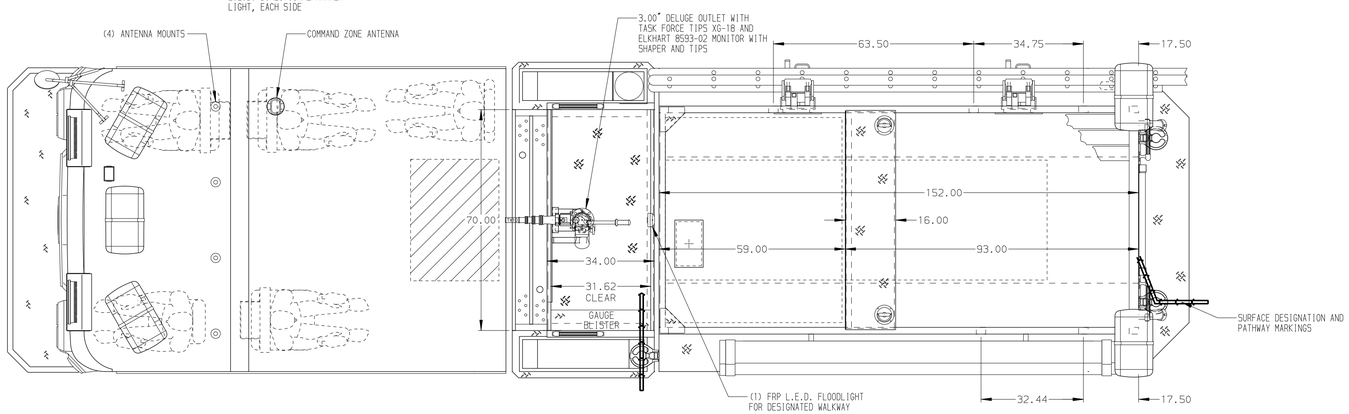

HOSEBED CAPACITIES

1. 300' OF 2.50" D.J. POLY HOSE
2. 300' OF 1.75" D.J. POLY HOSE
3. 1400' OF 5.00" D.J. POLY HOSE
4. 300' OF 1.75" D.J. POLY HOSE
5. 300' OF 2.50" D.J. POLY HOSE

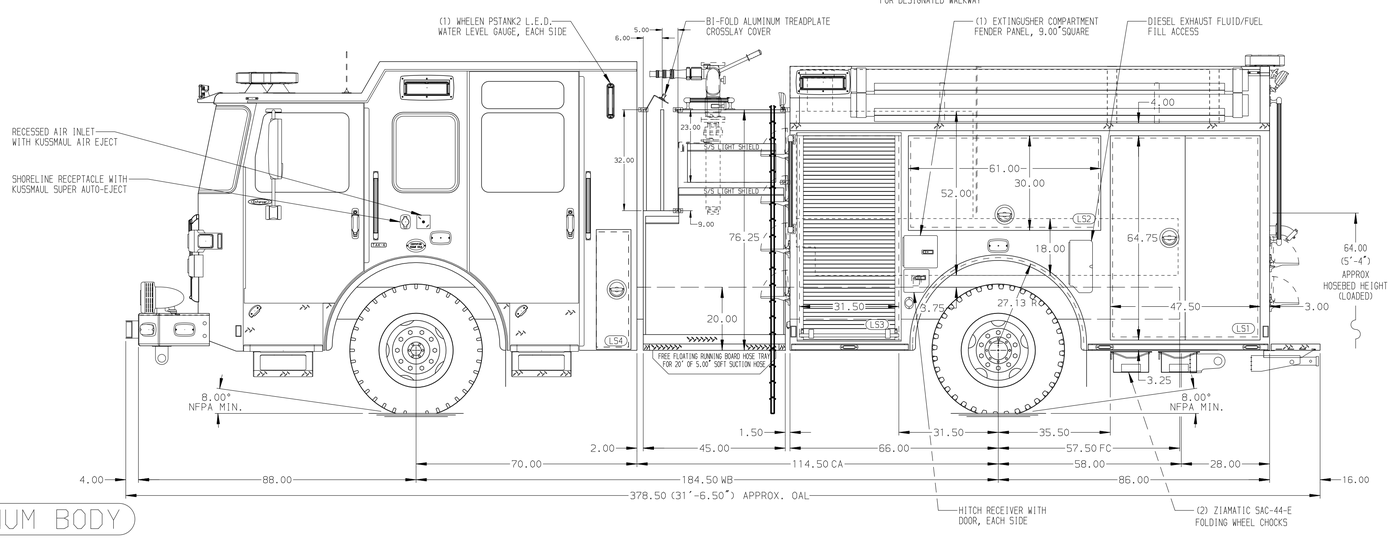

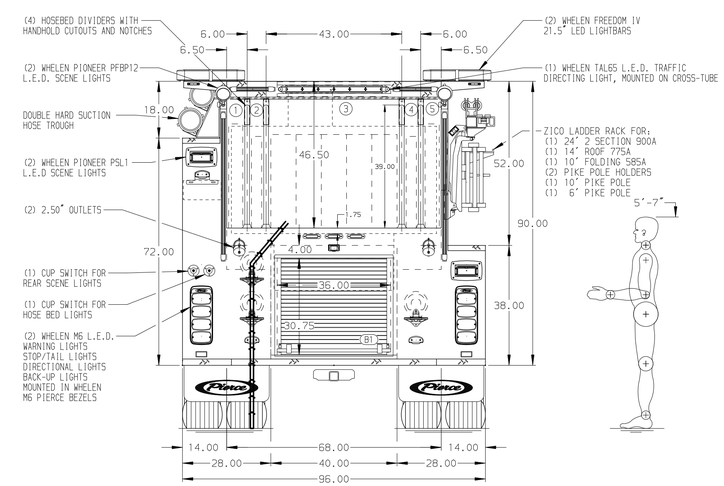

ALUMINUM BODY

MAXIMUM O.A.H. 124.00"

MAXIMUM O.A.L. 382.50"

SIDE ROLL AND FRONTAL IMPACT PROTECTION

NOTE

DIMENSIONS SHOWN ARE APPROXIMATE AND ARE SUBJECT TO MINOR DEVIATIONS AS MAY OCCUR OR BE NECESSARY IN CONSTRUCTION.
MINOR DETAILS NOT SHOWN.

1. BATTERY CHARGE INDICATOR LOCATED ON DRIVER'S SEAT RISER

REV	DATE	BY	CH
F	09DEC25	JDA	CSH
E	21NOV25	JDA	CSH
D	18SEP25	JDA	CSH
C	20AUG25	JDA	CSH
B	25JUL25	JDA	CSH

CHASSIS DATA — MAKE: PIERCE — MODEL: ENFORCER

Pierce MANUFACTURING INC.

TITLE: 1500 GPM, 750G WATERTANK 152" PUMPER, MUX

FOR: GREENWICH FIRE DEPARTMENT GREENWICH, CONNECTICUT

DWG NO.: 39967AD-SH1

JOB NO.	39967 01-02
SCALE	1:24
DATE	
DRAWN BY	JDA 14MAY25
CHECKED BY	SZE 14MAY25
SHEET SIZE	D
SHEET NO.	1 OF 2

View File Created 09-DEC-2025 11:19:45