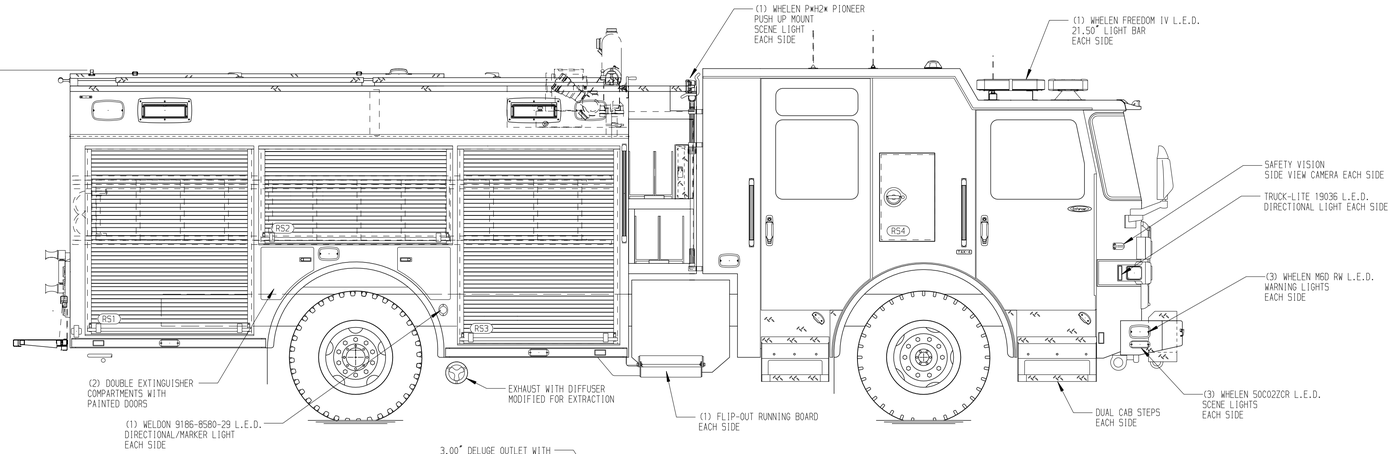

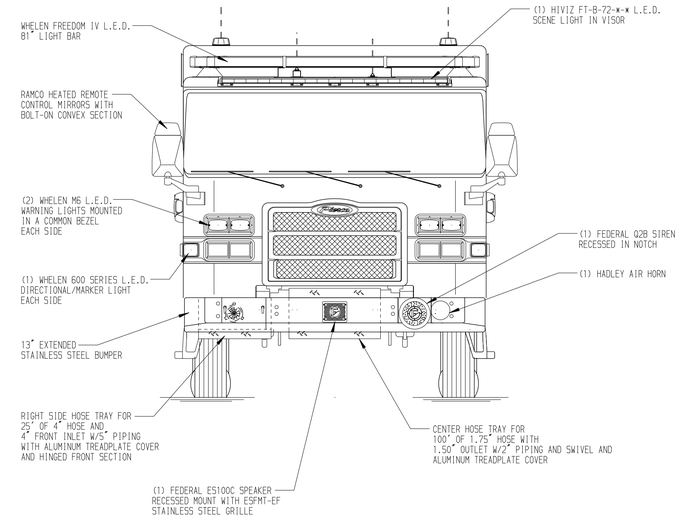

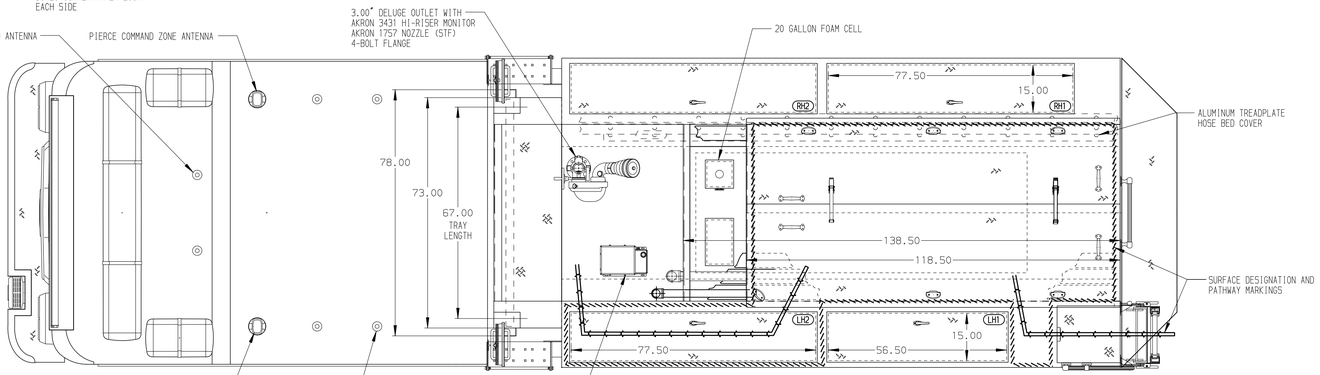

HOSEBED CAPACITIES

1. 200' OF 1.75" DJP HOSE
2. 200' OF 2.50" DJP HOSE
3. 700' OF 4.00" DJP HOSE
4. 700' OF 2.50" DJP HOSE

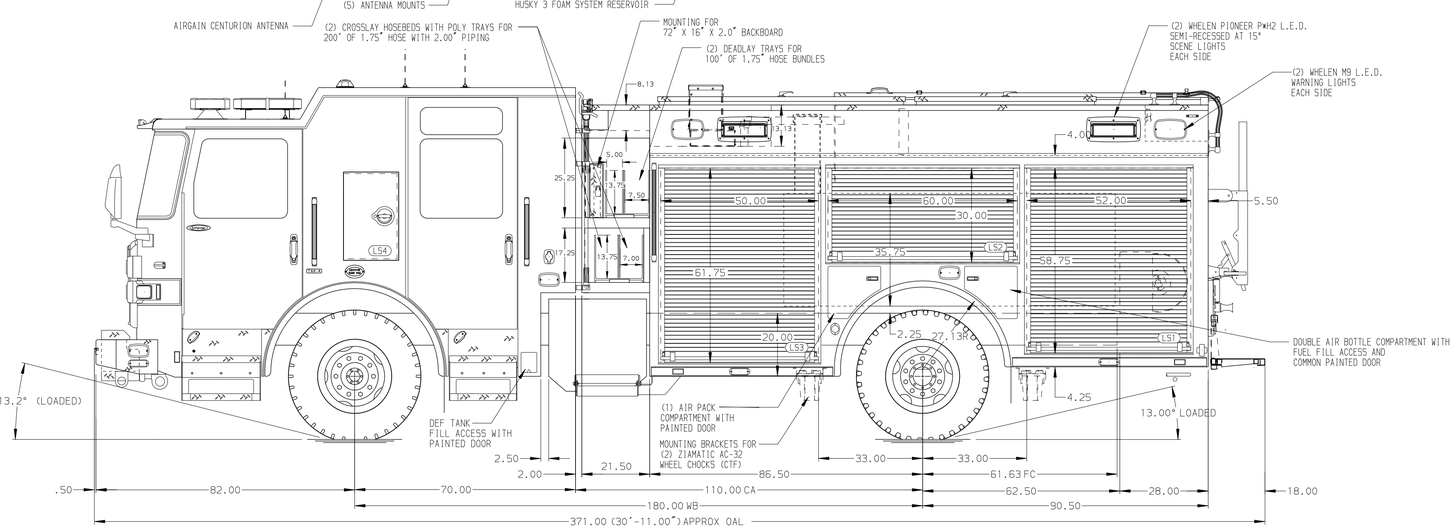

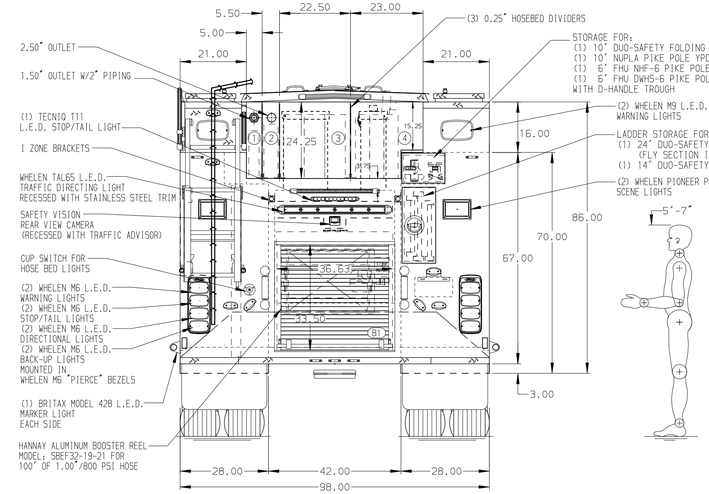

ALUMINUM BODY

MAXIMUM O.A.H. 116.00"

NOTE

DIMENSIONS SHOWN ARE APPROXIMATE AND ARE SUBJECT TO MINOR DEVIATIONS AS MAY OCCUR OR BE NECESSARY IN CONSTRUCTION.
MINOR DETAILS NOT SHOWN.

1. AIR INLET WITH DISCONNECT COUPLING LOCATED IN DRIVER'S SIDE STEPWELL
2. AIR OUTLET WITH SHUT OFF VALVE LOCATED AT DRIVER'S SIDE PUMP PANEL
3. BATTERY CHARGER LOCATED IN LS3
4. SHORELINE RECEPTACLE WITHKUSSMAUL SUPER AUTO-EJECT LOCATRED ON DRIVER'S SIDE CREW CAB

REV	DATE	BY	CH
1	11NOV25	LST	SJS
2	25SEP25	LST	SJS

CHASSIS DATA
MAKE: PIERCE
MODEL: ENFORCER

Pierce MANUFACTURING INC.

TITLE: 1500 GPM, 520 G TANK, 500 G WATER, 20 G FOAM CELL 177" PUC BODY, MUX

FOR: LAGUNA BEACH FIRE DEPARTMENT
LAGUNA BEACH, CALIFORNIA

DWG NO. 39984AD

JOB NO.	39984
SCALE	1:24
DATE	01JUL25
DRAWN BY	LST
CHECKED BY	KLH
DATE	2JUL25
SHEET SIZE	D
SHEET NO.	1 OF 1

View File Created 11-NOV-2025 14:26:29