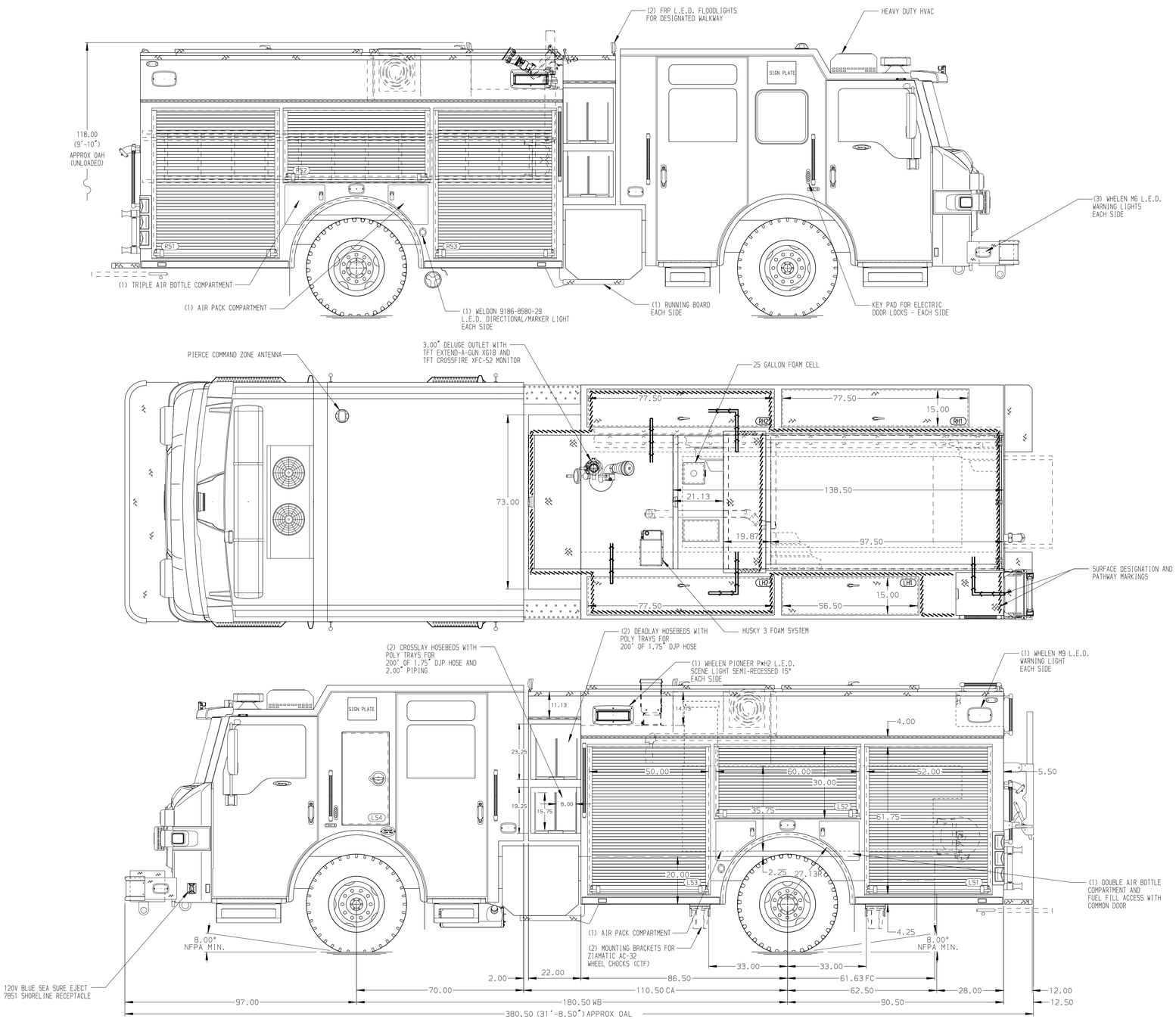

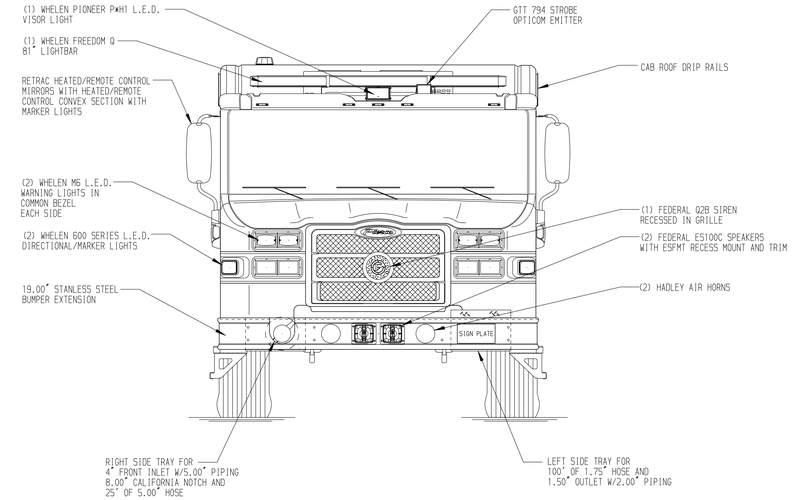

HOSEBED CAPACITIES
1 - 600' OF 2.50" HOSE
2 - 200' OF 2.50" HOSE
3 - 800' OF 4.00" HOSE

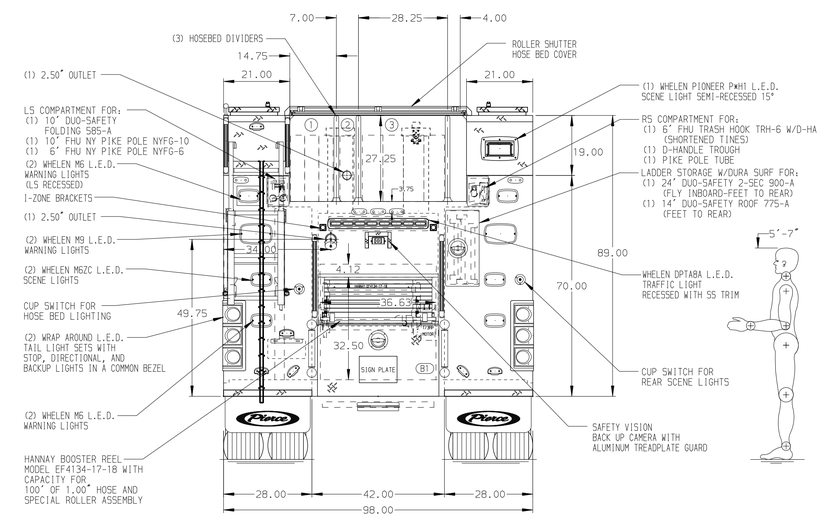

ALUMINUM BODY

MAXIMUM O.A.H. 120.00"

REFERENCE: 37829

NOTE

DIMENSIONS SHOWN ARE APPROXIMATE AND ARE SUBJECT TO MINOR DEVIATIONS AS MAY OCCUR OR BE NECESSARY IN CONSTRUCTION.
MINOR DETAILS NOT SHOWN.

1. AIR INLET/OUTLET W/DISCONNECT COUPLING LOCATED IN DRIVER'S SIDE STEP WELL
2. DEF TANK MOUNTED UNDER CAB ON THE DRIVER'S SIDE
3. INVERTER/BATTERY CHARGER LOCATED BEHIND DRIVER'S SEAT PER ORDER
4. BATTERY CHARGE INDICATOR LOCATED ON DRIVER'S SEAT RISER PER ORDER
5. C-TECH DRAWER ASSEMBLY LOCATED IN BODY COMPARTMENT PER ORDER
6. PARTITION BETWEEN COMPARTMENTS LS1/B1 AND RS1/B1

REV	DATE	BY	CH
5	05NOV25	SAM	DTJ
4	14AUG25	SAM	KLH

CHASSIS DATA
MAKE: PIERCE
MODEL: VELOCITY

Pierce MANUFACTURING INC.

TITLE: 1500GPM, 525G TANK, 500G WATER, 25G FOAM 177" PUC, MUX
FOR: OCEANSIDE FIRE DEPARTMENT OCEANSIDE, CALIFORNIA
DWG NO.: 40000AD

JOB NO.	40000 01-02
SCALE	1:24
DATE	
DRAWN BY	SAM
	23JUL25
CHECKED BY	KLH
	23JUL25
SHEET SIZE	D
SHEET NO.	1 OF 1

View File Created 06-NOV-2025 10:01:26