RIGHT SIDE COMPARTMENTS CONTAIN THE FOLLOWING:

COMPARTMENT RS1 CONTAINS:
- (1) STD DEPTH ADJ SHELF
- (1) VERTICAL COMPARTMENT DIVIDER
- (1) 4-DRAWER C-TECH CABINET
-
-
-

COMPARTMENT RS2 CONTAINS:
- (1) STD DEPTH ADJ SLIDE OUT/TILT TRAY
-
-
-

COMPARTMENT RS3 CONTAINS:
- (1) STD DEPTH ADJ SLIDE OUT/TILT TRAY
-
-
-

COMPARTMENT RS4 CONTAINS:
- (1) STD DEPTH ADJ SLIDE OUT/TILT TRAY
- (1) STD DEPTH ADJ SLIDE OUT TRAY
- (1) FLOOR MOUNTED TRAY
- (1) 15/20A,120V DUPLEX RECEPTACLE

COMPARTMENT RS5 CONTAINS:
- (1) CAB LIFT CONTROLLER
- (1) VERTICAL COMPARTMENT DIVIDER
- (1) STD DEPTH INVERTED SHELF
- (1) CROSSLAY WITH 150' OF 1.75" HOSE
- (1) TRANSVERSE STORAGE COMPARTMENT
- (1) 15/20A,120V DUPLEX RECEPTACLE
-
-

COMPARTMENT RS6 CONTAINS:
- (1) STOKES BASKET RACK
- (1) RACK FOR BACKBOARD
- (1) RACK FOR LITTLE GIANT LADDER
-

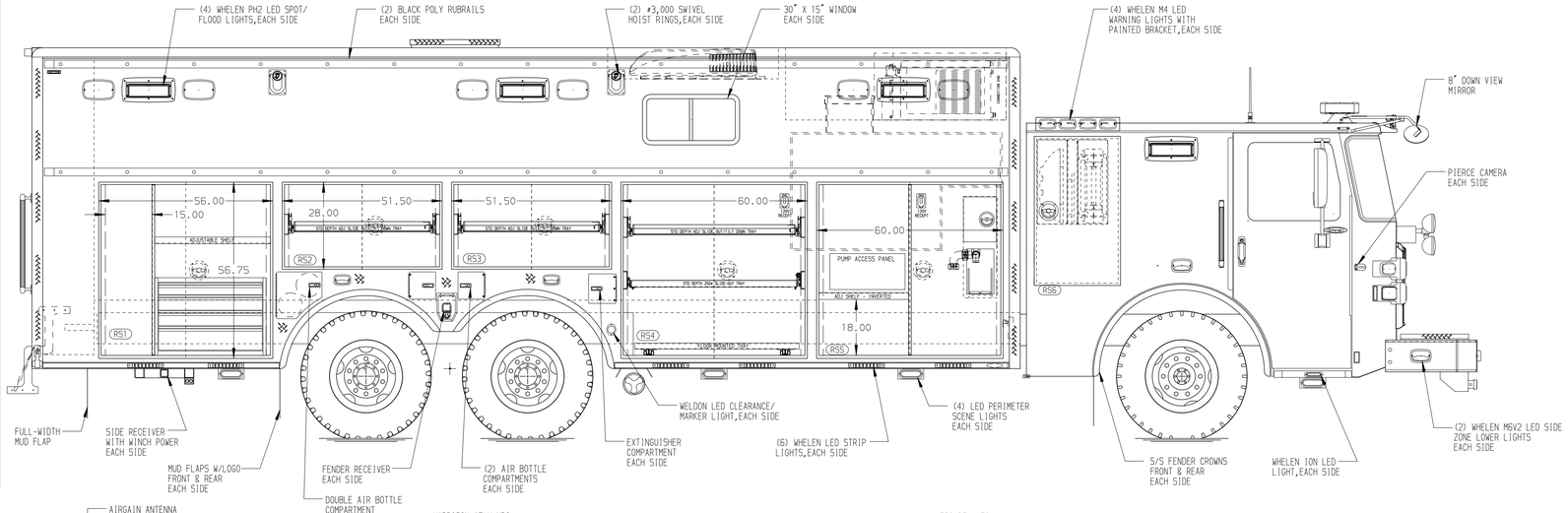

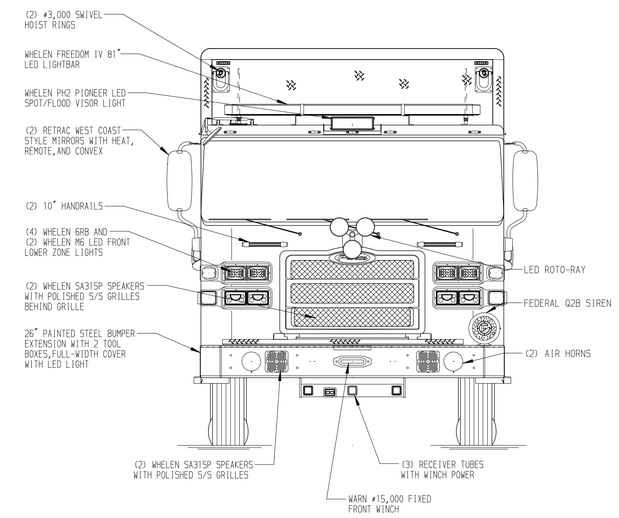

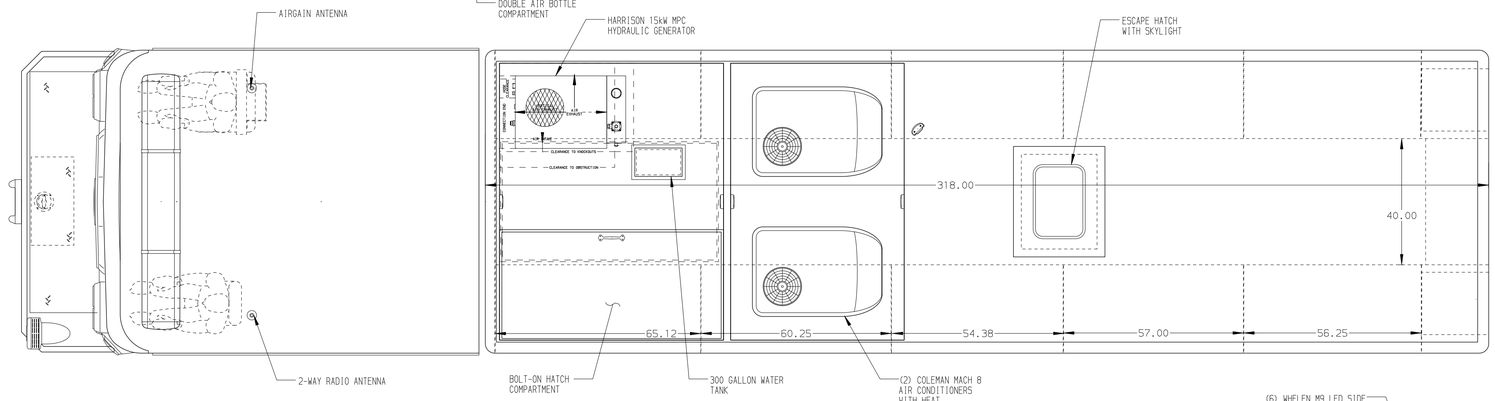

REAR COMPARTMENT CONTAINS THE FOLLOWING:

COMPARTMENT B1 CONTAINS:
-
-
-
-
-

COMPARTMENT B2 CONTAINS:
-
-
-
-
-

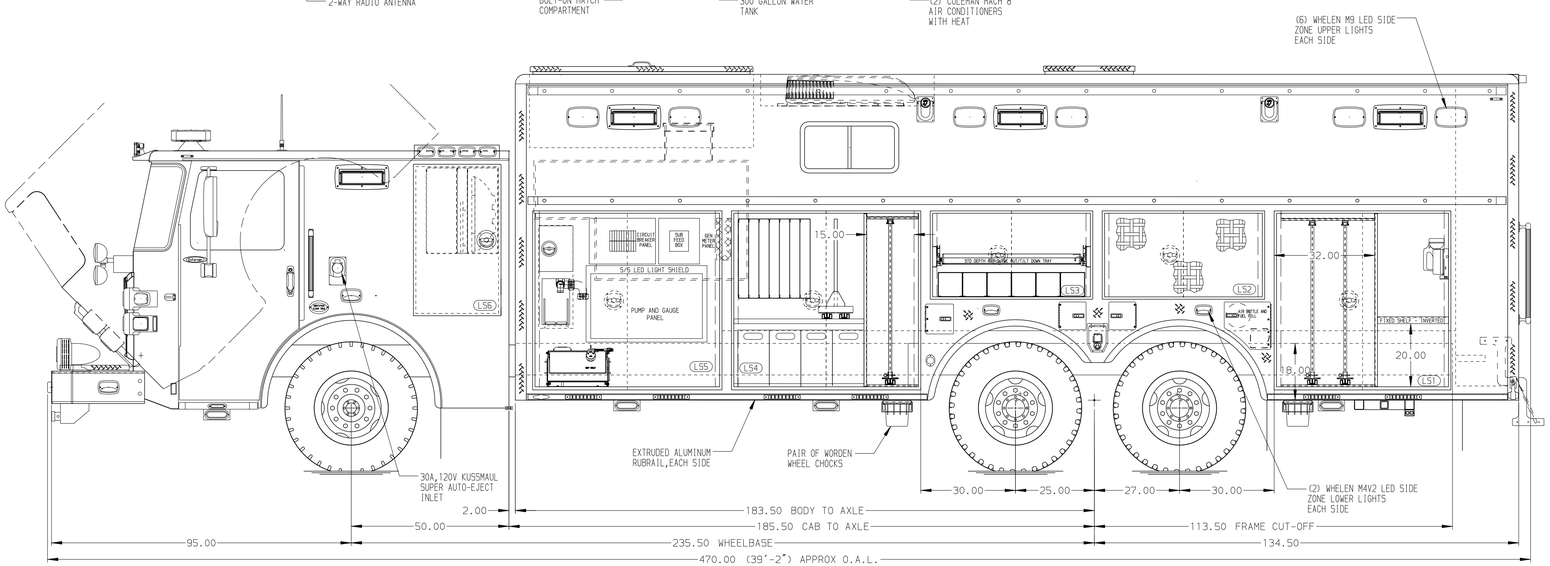

LEFT SIDE COMPARTMENTS CONTAIN THE FOLLOWING:

COMPARTMENT LS1 CONTAINS:
- (1) STREAMLIGHT FIRE VULCAN HANDLIGHT
- (2) STD DEPTH ADJ SLIDE OUT TOOLBOARDS
- (1) VERTICAL COMPARTMENT DIVIDER
- (1) STD DEPTH INVERTED SHELF
-
-

COMPARTMENT LS2 CONTAINS:
- CARGO RETENTION NETTING
-
-

COMPARTMENT LS3 CONTAINS:
- (1) RACK FOR 6 SCBA BOTTLES
- (1) STD DEPTH ADJ SLIDE OUT/TILT TRAY
-
-

COMPARTMENT LS4 CONTAINS:
- (1) VERTICAL COMPARTMENT DIVIDER
- (1) REINFORCED HORIZONTAL DIVIDER
- (1) STD DEPTH ADJ SLIDE OUT TRAY(11"WIDE) WITH TOOLBOARD
- (4) POLY TOOL BOXES
- (1) STD DEPTH ADJ SLIDE OUT TOOLBOARD
- (1) RACK FOR 7 AIR BAGS

COMPARTMENT LS5 CONTAINS:
- (1) 6 GALLON DEF TANK
- (1) CROSSLAYS WITH 150' OF 1.75" HOSE
- (1) CIRCUIT BREAKER PANEL
- (1) SUB FEED BOX
- (1) GENERATOR METER PANEL
- (1) TRANSVERSE STORAGE COMPARTMENT
-
-

COMPARTMENT LS6 CONTAINS:
- (1) STOKES BASKET RACK
- (1) RACK FOR BACKBOARD
-
-

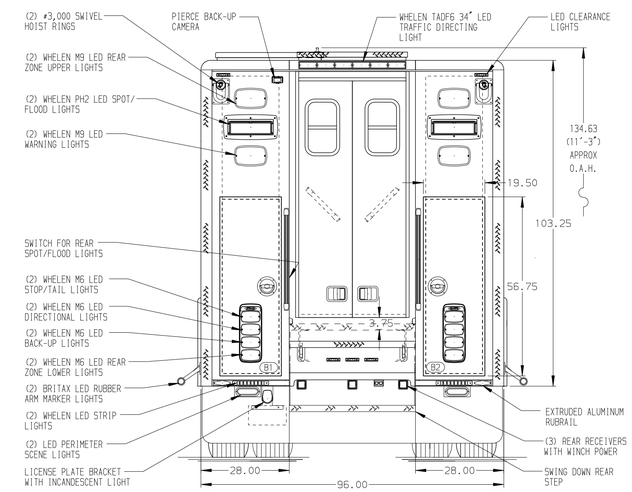

NOTE

DIMENSIONS SHOWN ARE APPROXIMATE AND ARE SUBJECT TO MINOR DEVIATIONS AS MAY OCCUR OR BE NECESSARY IN CONSTRUCTION.
MINOR DETAILS NOT SHOWN.

NOTES:
1. PIERCE DUAL LED LIGHTS IN ALL EXTERIOR COMPARTMENTS
2. WATEROUS CPK-2 250 GPM SINGLE PHASE PTO DRIVEN WATER PUMP
3. POLISHED S/S SCUFFPLATES ON CAB DOORS
4. FLOOR IN CAB TO BE ALUMINUM TREADPLATE
5. KUSSMAUL CHIEF CHARGER LOCATED BEHIND DRIVER'S SEAT
6. BATTERY CHARGE INDICATOR LOCATED ON DRIVER'S SEAT WITH BRACKET
7. ALUMINUM TREADPLATE ON ALL BODY CORNERS
8. ALUMINUM TREADPLATE ON FRONT OF BODY AND REAR FENDER PANELS
9. BRUSHED S/S SCUFFPLATES ON INSIDE OF ALL COMPARTMENT DOORS

CLEAR DOOR WIDTH KEY

AMDOR ROLL UP DOORS:	-2 1/4"
GORTITE ROLL UP DOORS:	-2 1/2"
PIERCE DOUBLE LAP DOORS:	-4 1/4"
PIERCE LIFT-UP LAP DOORS:	-1 1/2"

(EX: 60"F-F - 2 1/4"= 57 3/4" CLEAR)
(F-F)= FRAME TO FRAME

REV	DATE	BY	CH
0	25OCT24	DHE	AZU
1	29AUG24	DHE	AZU
2	01JUL24	PDE	CDK

CHASSIS DATA
MAKE: PIERCE
MODEL: EN5000
DWG NO.

Pierce MANUFACTURING INC.

TITLE: HEAVY DUTY RESCUE
NON-WALKIN

FOR: LEXINGTON COUNTY FIRE SERVICE
SPARTEN FIRE & EMERGENCY APPARATUS

BID #747
TREY COKER

40001AD-SH1

JOB NO.	40001
SCALE	1:24
DATE	18JUN24
DRAWN BY	DHE
CHECKED BY	CDK
19JUN24	
SHEET SIZE	D
SHEET NO.	1 OF 1

View File Created 25-OCT-2024 12:59:49