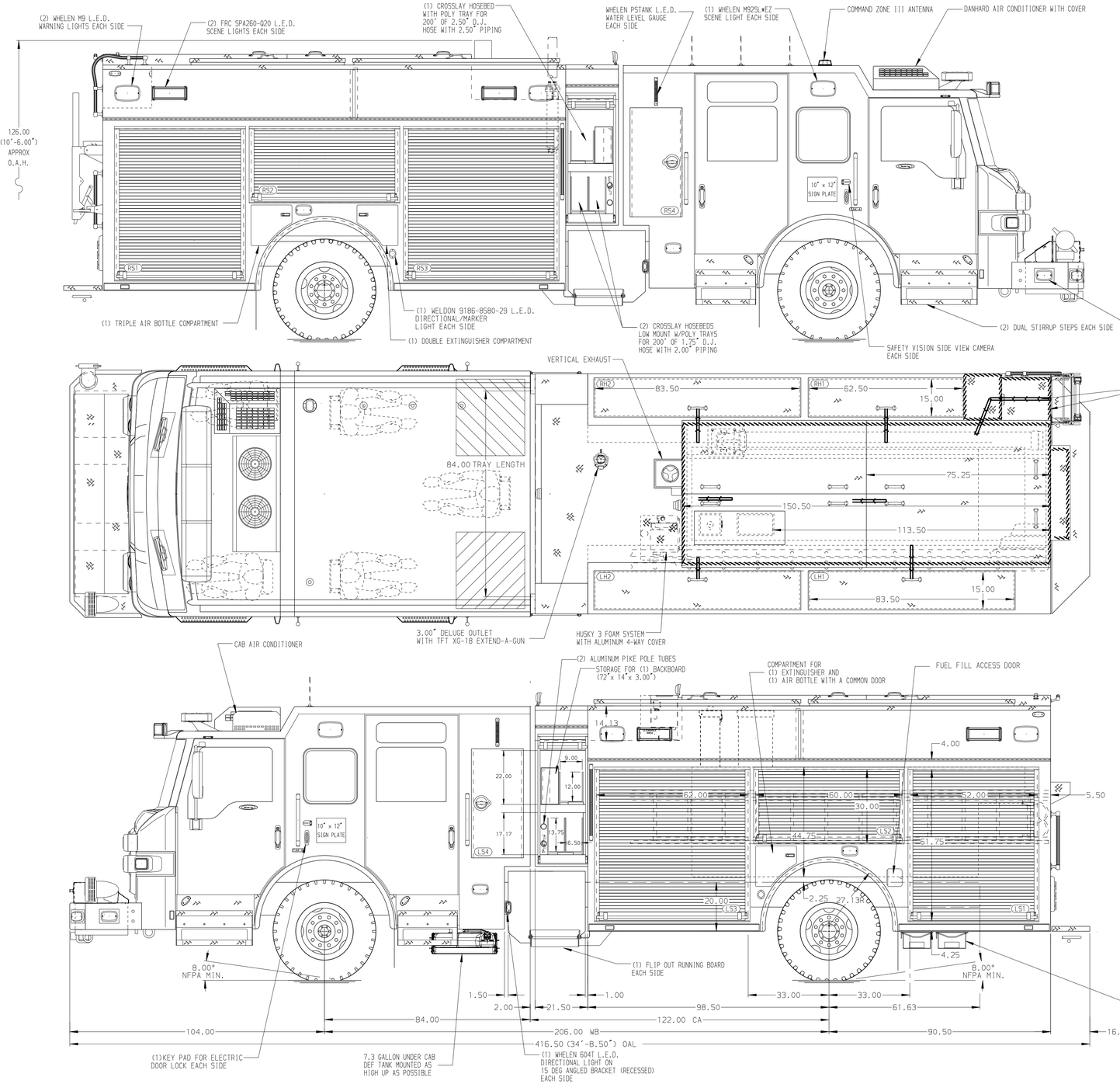

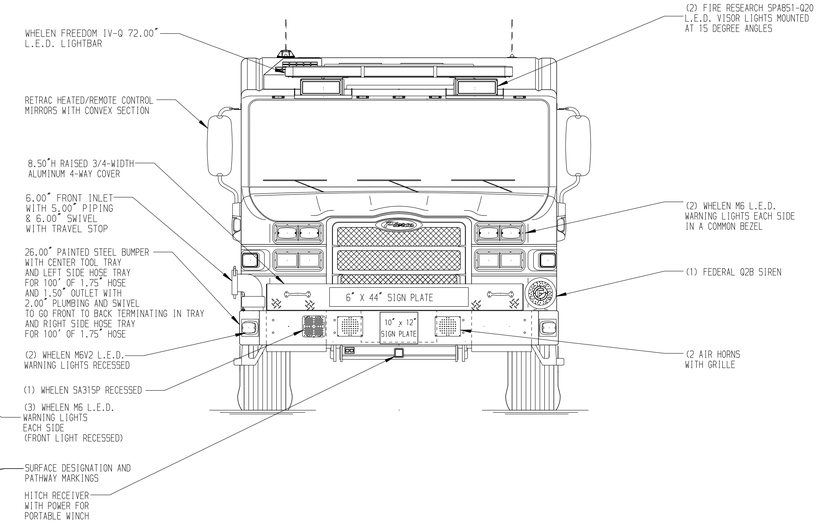

HOSEBED CAPACITIES
1. 400' OF 2.50" D.J. POLY HOSE
2. 1100' OF 5.00" D.J. POLY HOSE

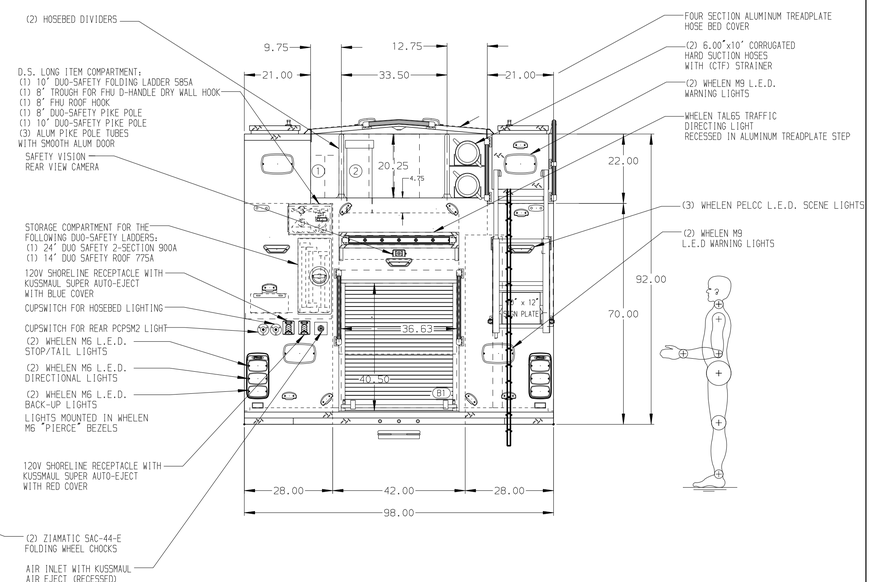

ALUMINUM BODY

SIDE ROLL AND FRONTAL IMPACT PROTECTION

NOTE

DIMENSIONS SHOWN ARE APPROXIMATE AND ARE SUBJECT TO MINOR DEVIATIONS AS MAY OCCUR OR BE NECESSARY IN CONSTRUCTION.
MINOR DETAILS NOT SHOWN.

1. BATTERY CHARGER LOCATED IN COMPARTMENT LS3 MOUNTED TO CEILING
2. BATTERY CHARGER INDICATOR LOCATED NEAR D.S. SEAT RISER WITH BRACKET
3. DUAL L.E.D. LIGHT STRIPS LOCATED IN HOSE BED
4. AIR OUTLET WITH SHUT OFF VALVE ON PUMP PANEL PER ORDER
5. CONCEALED SWITCH ON DS FRONT CORNER CAB EXTERIOR PER ORDER

REV	DATE	BY	CH
V	14MAY25	BTH	JJR

CHASSIS DATA
MAKE: PIERCE
MODEL: VELOCITY

Pierce MANUFACTURING INC.

TITLE: 1500GPM, 775 TANK, 750G WATER, 25G FOAM CELL 189" PUC RESCUE, VELOCITY ESP ELECTRICAL SYSTEM
FOR: BROWARD COUNTY FORT LAUDERDALE, FLORIDA
DWG NO.: 40004AD-SH1

JOB NO.	40004
SCALE	1:24
DATE	
DRAWN BY	BTH 06MAR25
CHECKED BY	JJR 07MAR25
SHEET SIZE	D
SHEET NO.	1 OF 2

View File Created 15-MAY-2025 09:39:22