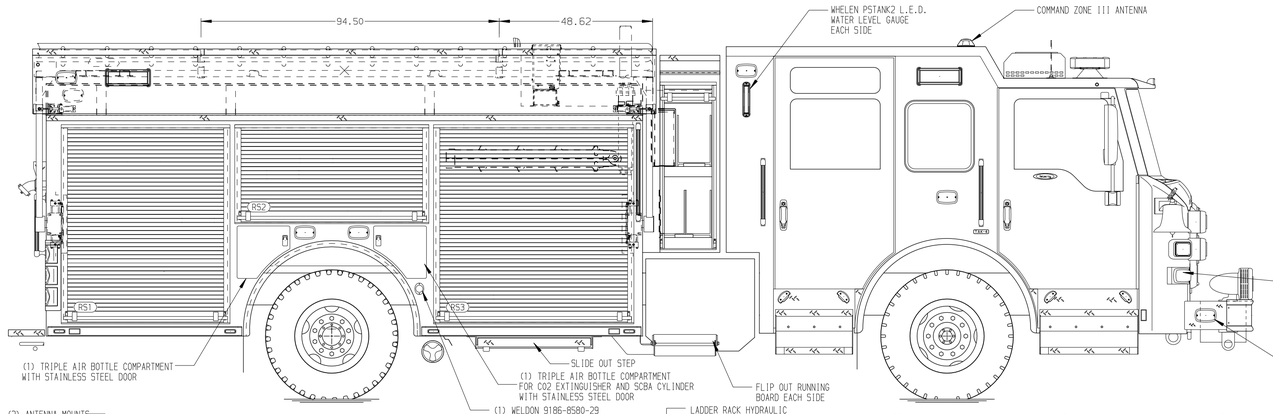

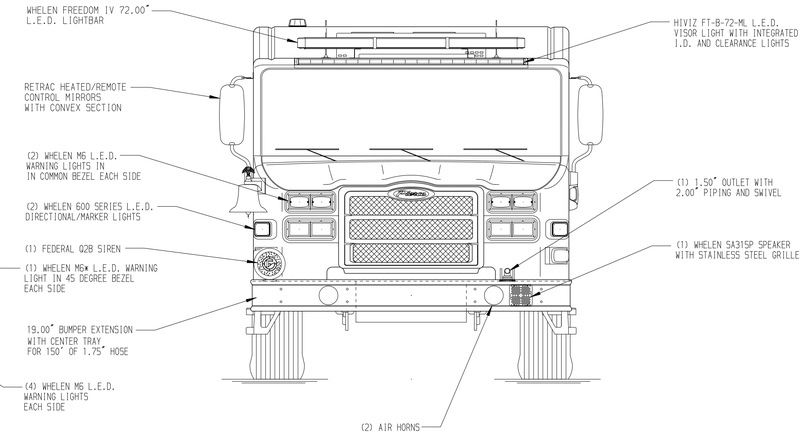

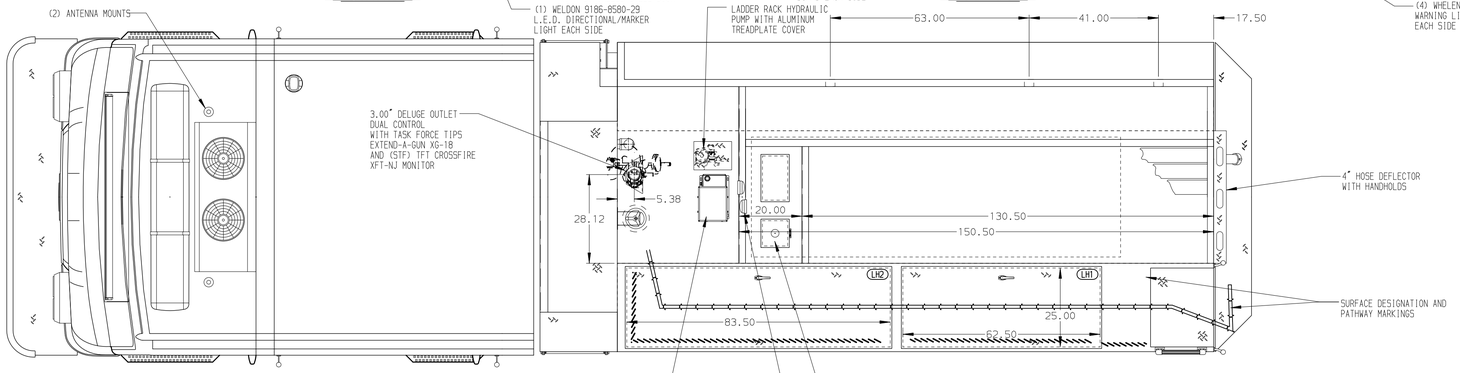

HOSEBED CAPACITIES

1. 800' OF 5.00" LDH HOSE
2. 500' OF 2.50" D.J. POLY HOSE
3. 400' OF 2.50" D.J. POLY HOSE

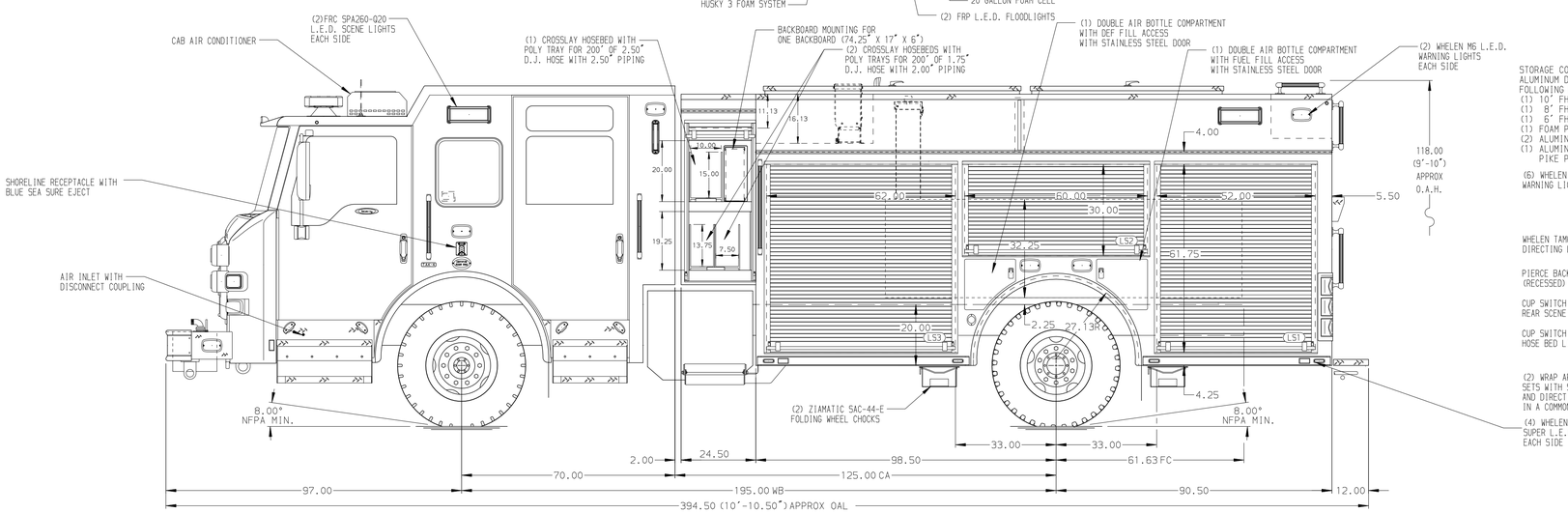

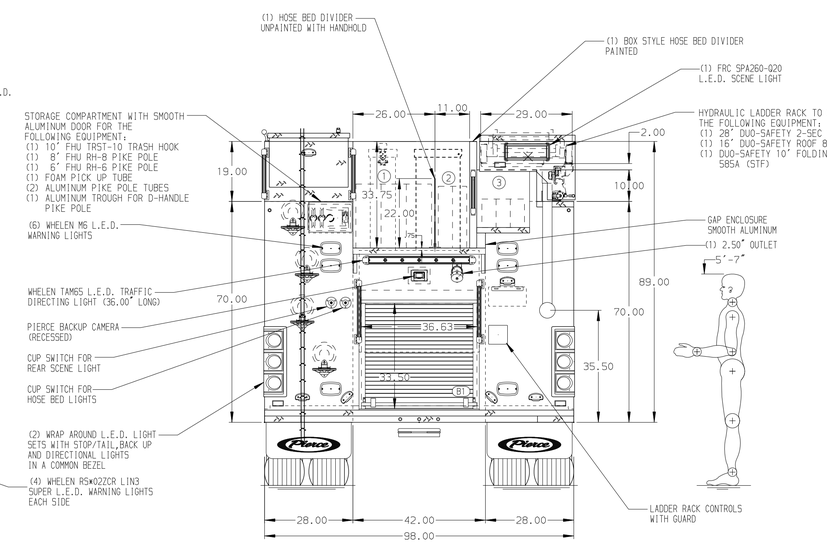

ALUMINUM BODY | MAXIMUM O.A.H. 119.00" | SIDE ROLL AND FRONTAL IMPACT PROTECTION

Pierce MANUFACTURING INC.

NOTE

DIMENSIONS SHOWN ARE APPROXIMATE AND ARE SUBJECT TO MINOR DEVIATIONS AS MAY OCCUR OR BE NECESSARY IN CONSTRUCTION.
MINOR DETAILS NOT SHOWN.

1. BATTERY CHARGER LOCATED BEHIND DRIVER'S SEAT
2. BATTERY CHARGER INDICATOR BEHIND DRIVER'S SEAT DISPLAYED THROUGH WINDOW
3. DUAL L.E.D. LIGHT STRIPS LOCATED IN HOSE BED
4. ELECTRIC HEATER LOCATED IN COMPARTMENT RS1

REV	DATE	BY	CH
7	06OCT25	BBA	GKH
6	26AUG25	JAM	GKH
5	22MAY25	JAM	KLH

CHASSIS DATA
MAKE: PIERCE
MODEL: VELOCITY FR
DWG NO.: 40011AD

TITLE: 1500 GPM, 520G TANK, 500G WATER, 20G FOAM 189" PUC RESCUE, MUX
FOR: NORTH METRO FIRE RESCUE BROOMFIELD, COLORADO

JOB NO.	40011 01-02
SCALE	1:24
DATE	
DRAWN BY	JAM
	12MAY25
CHECKED BY	KLH
	12MAY25
SHEET SIZE	D
SHEET NO.	1 OF 1

View File Created 10-OCT-2025 10:43:44