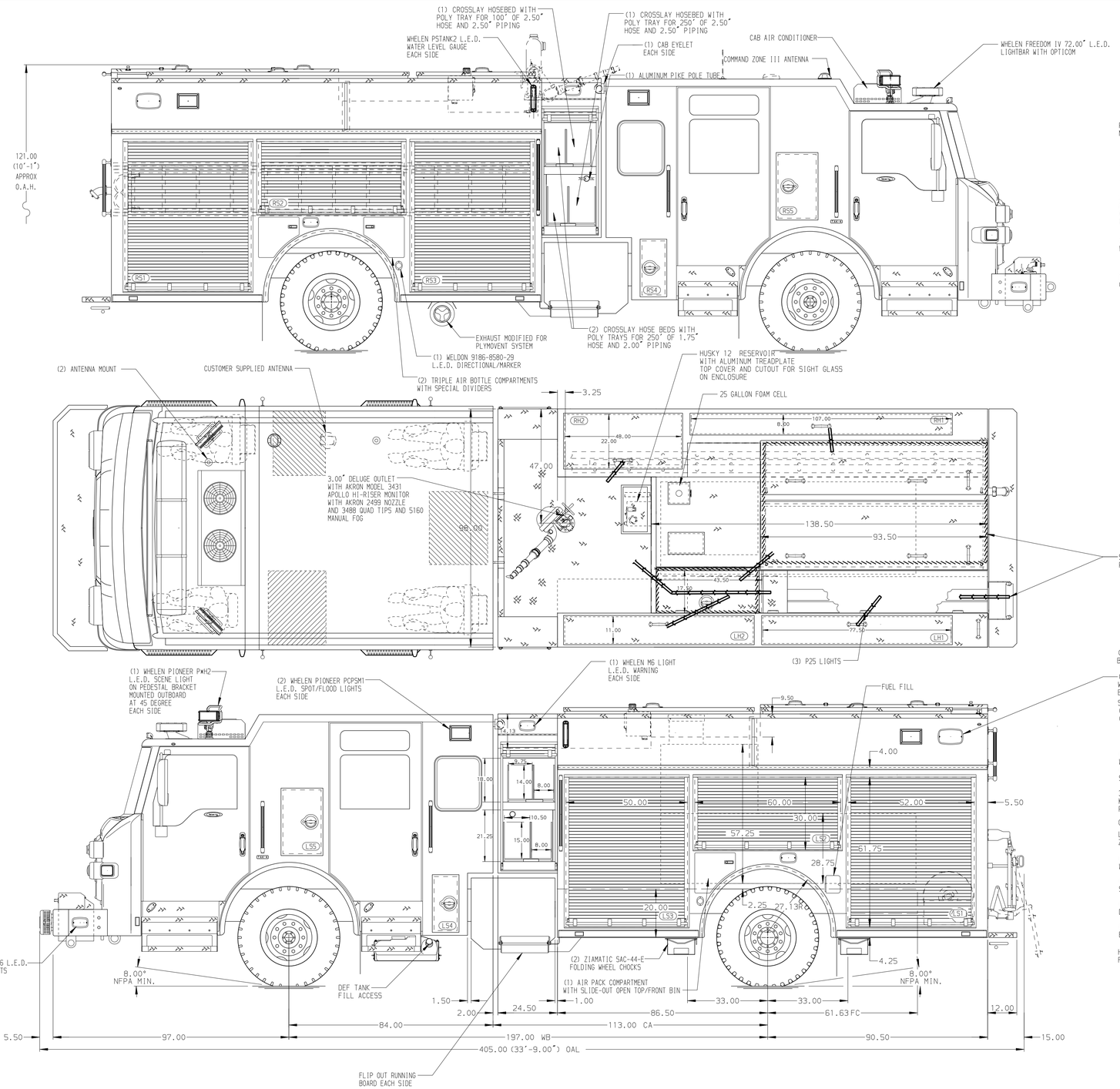

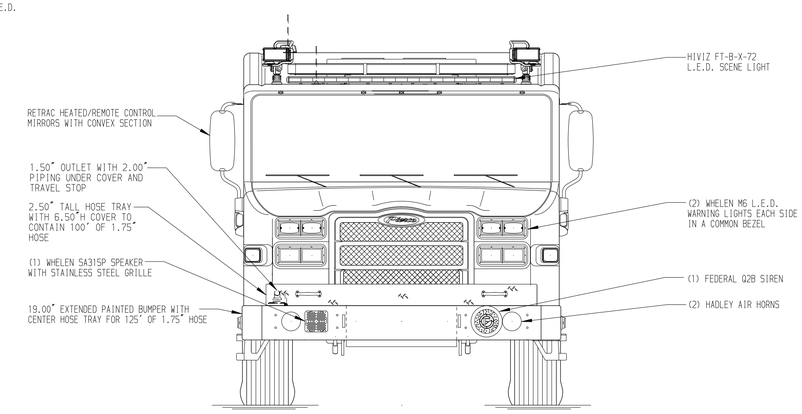

HOSEBED CAPACITIES

1. - EMPTY
2. - 1000' OF 5.00" HI-VOL HOSE
3. - 1000' OF 2.50" D.J. HOSE

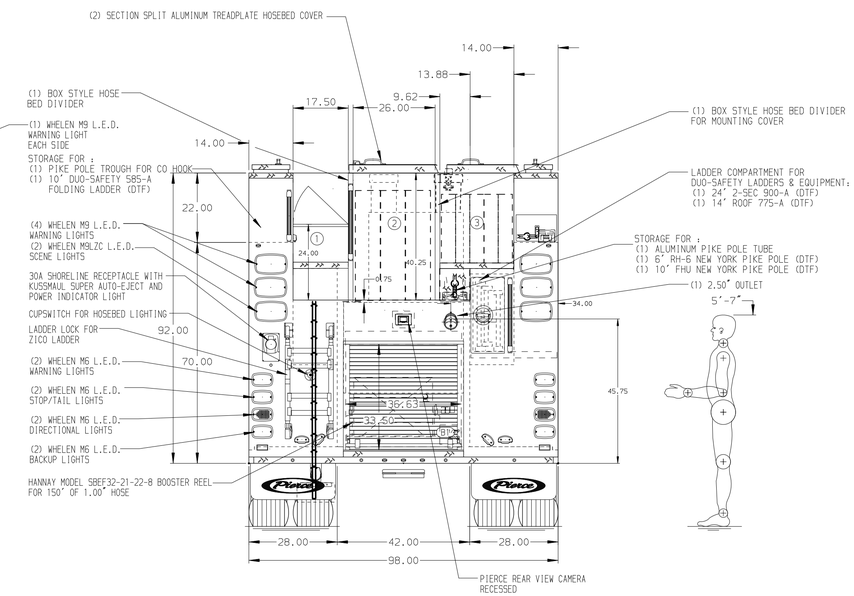

ALUMINUM BODY | SIDE ROLL AND FRONTAL IMPACT PROTECTION | REF. PREV. 37847

Pierce MANUFACTURING INC.

NOTE

DIMENSIONS SHOWN ARE APPROXIMATE AND ARE SUBJECT TO MINOR DEVIATIONS AS MAY OCCUR OR BE NECESSARY IN CONSTRUCTION.
MINOR DETAILS NOT SHOWN.

1. RUD ROTOGRIP TIRE CHAINS TO BE PROVIDED AT THE REAR
2. AIR INLET W/DISCONNECT COUPLING ON THE DRIVER'S SEAT RISER
3. BATTERY CHARGER INDICATOR LOCATED NEAR DRIVER'S SEAT RISER WITH BRACKET
4. WHELEN 7OCOELZR L.E.D. LIGHT LOCATED AT THE FRONT OF THE HOSE BED

REV	DATE	BY	CH
F	09MAR26	JAM	SGH
E	28JAN26	JAM	SGH
D	11DEC25	JAM	SGH
C	26SEP25	JAM	SGH
B	15AUG25	JAM	JJR

CHASSIS DATA: MAKE PIERCE; MODEL VELOCITY FR

TITLE: 1250GPM, 525G TANK, 500G WATER, 25G FOAM 177" PUC BODY, MUX

FOR: WEST METRO FIRE RESCUE LITTLETON, COLORADO

DWG NO. 40013AD-SH1

JOB NO.	40013 01-02
SCALE	1:24
DATE	
DRAWN BY	SAM 16APR25
CHECKED BY	SGH 18APR25
SHEET SIZE	D
SHEET NO.	1 OF 2

View File Created 09-MAR-2026 10:25:30