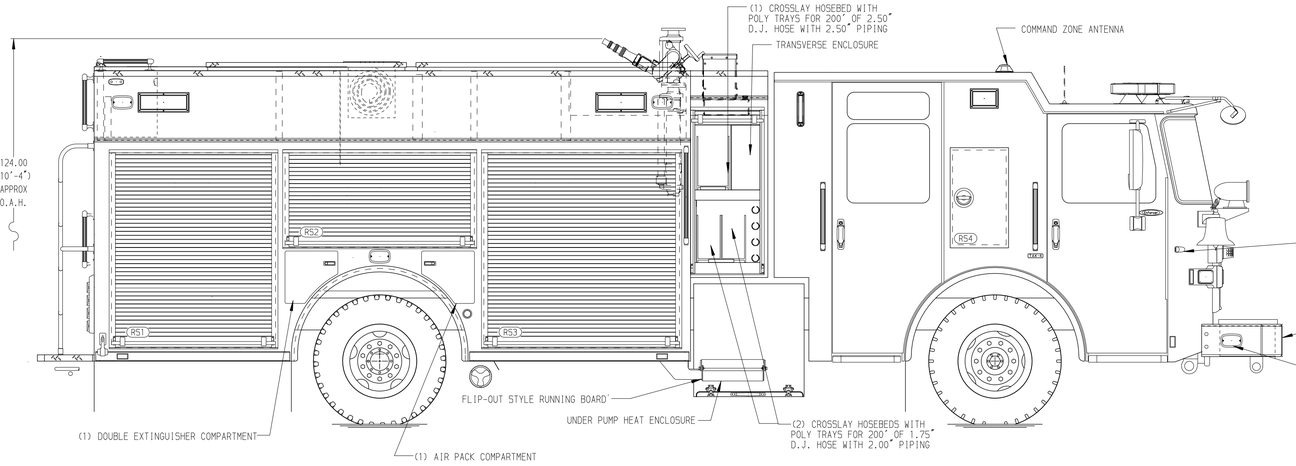

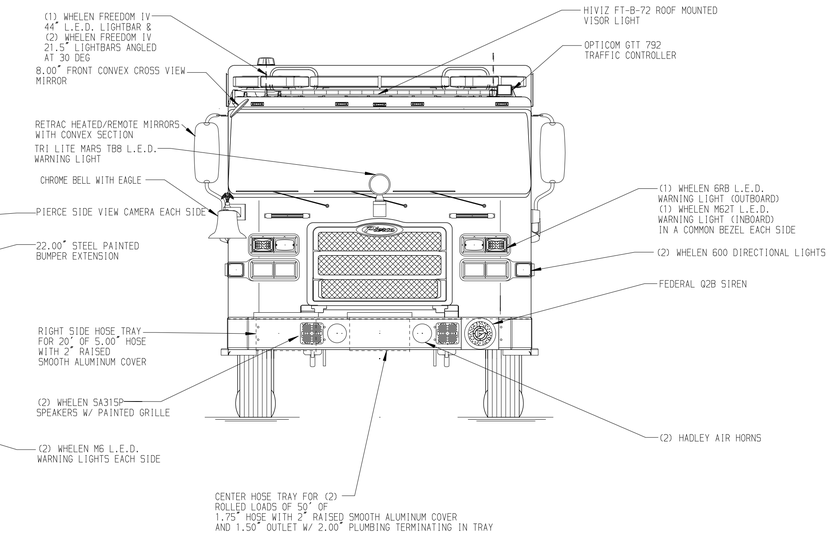

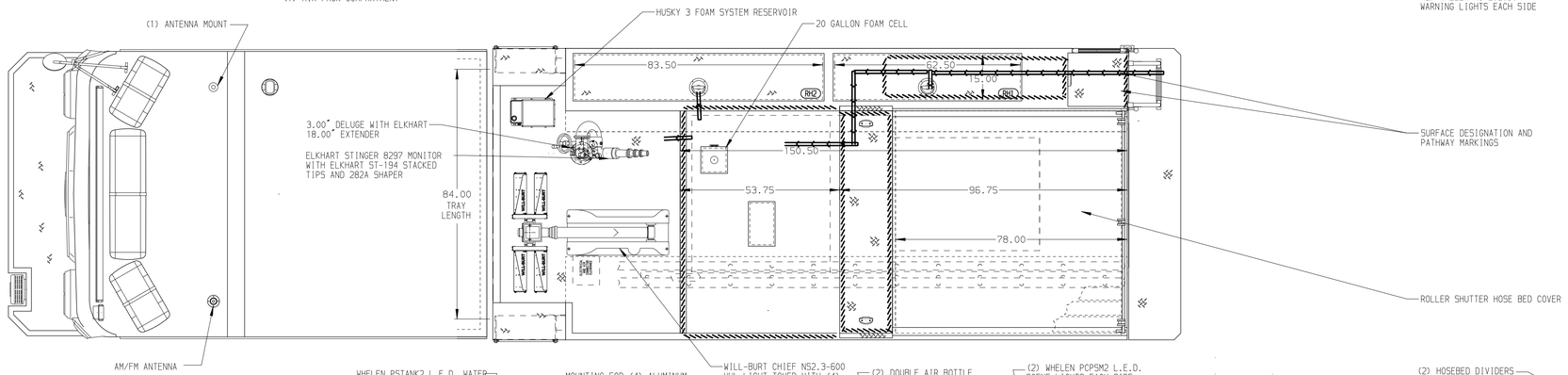

HOSEBED CAPACITIES

1. 200' OF 2.50" D.J. HOSE
2. 850' OF 5.00" D.J. HOSE
3. 200' OF 2.50" D.J. HOSE BELOW 100' OF 1.75" HOSE
4. 200' OF 2.50" D.J. HOSE

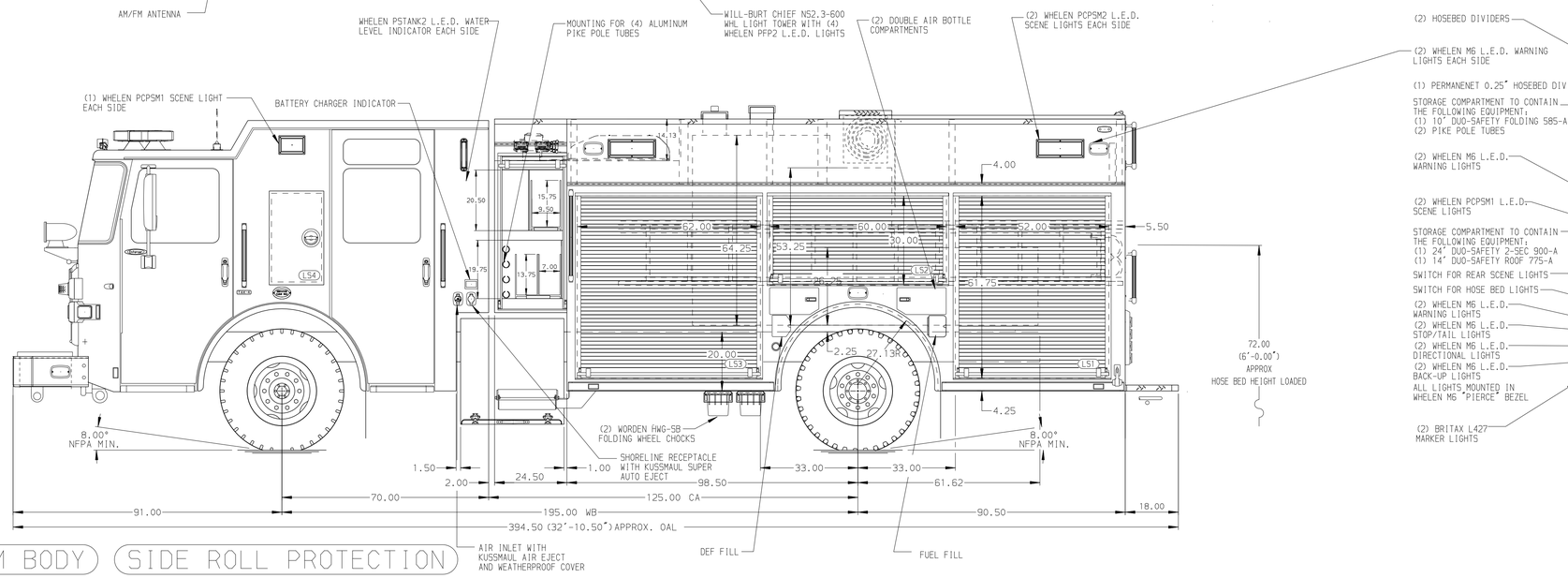

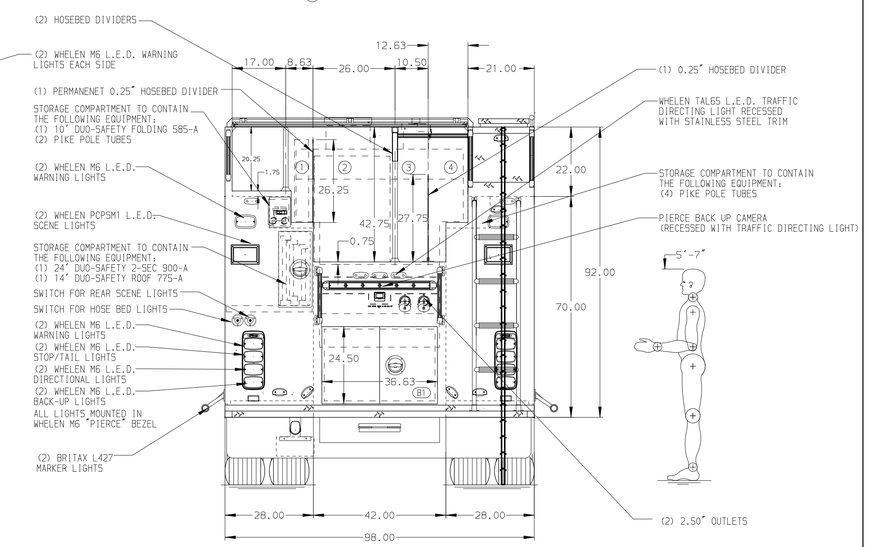

ALUMINUM BODY | SIDE ROLL PROTECTION

NOTE

DIMENSIONS SHOWN ARE APPROXIMATE AND ARE SUBJECT TO MINOR DEVIATIONS AS MAY OCCUR OR BE NECESSARY IN CONSTRUCTION.
MINOR DETAILS NOT SHOWN.

1. BATTERY CHARGER IN LS3

REV	DATE	BY	CH
V	07JAN25	LST	SJS
V	18DEC25	LST	SJS
B	19NOV25	LST	SJS
V	12NOV25	LST	SJS

CHASSIS DATA — MAKE: PIERCE — MODEL: ENFORCER

Pierce MANUFACTURING INC.

TITLE: 1500 GPM, 820 G TANK, 800 G WATER, 20 G FOAM CELL 189 PUC BODY, MUX

FOR: CHASKA FIRE DEPARTMENT, CHASKA, MINNESOTA

DWG NO.: 40022AD

JOB NO.	40022
SCALE	1:24
DATE	
DRAWN BY	LST — 22AUG25
CHECKED BY	IPR — 25AUG25
SHEET SIZE	D
SHEET NO.	1 OF 1

View File Created 07-JAN-2026 08:45:01