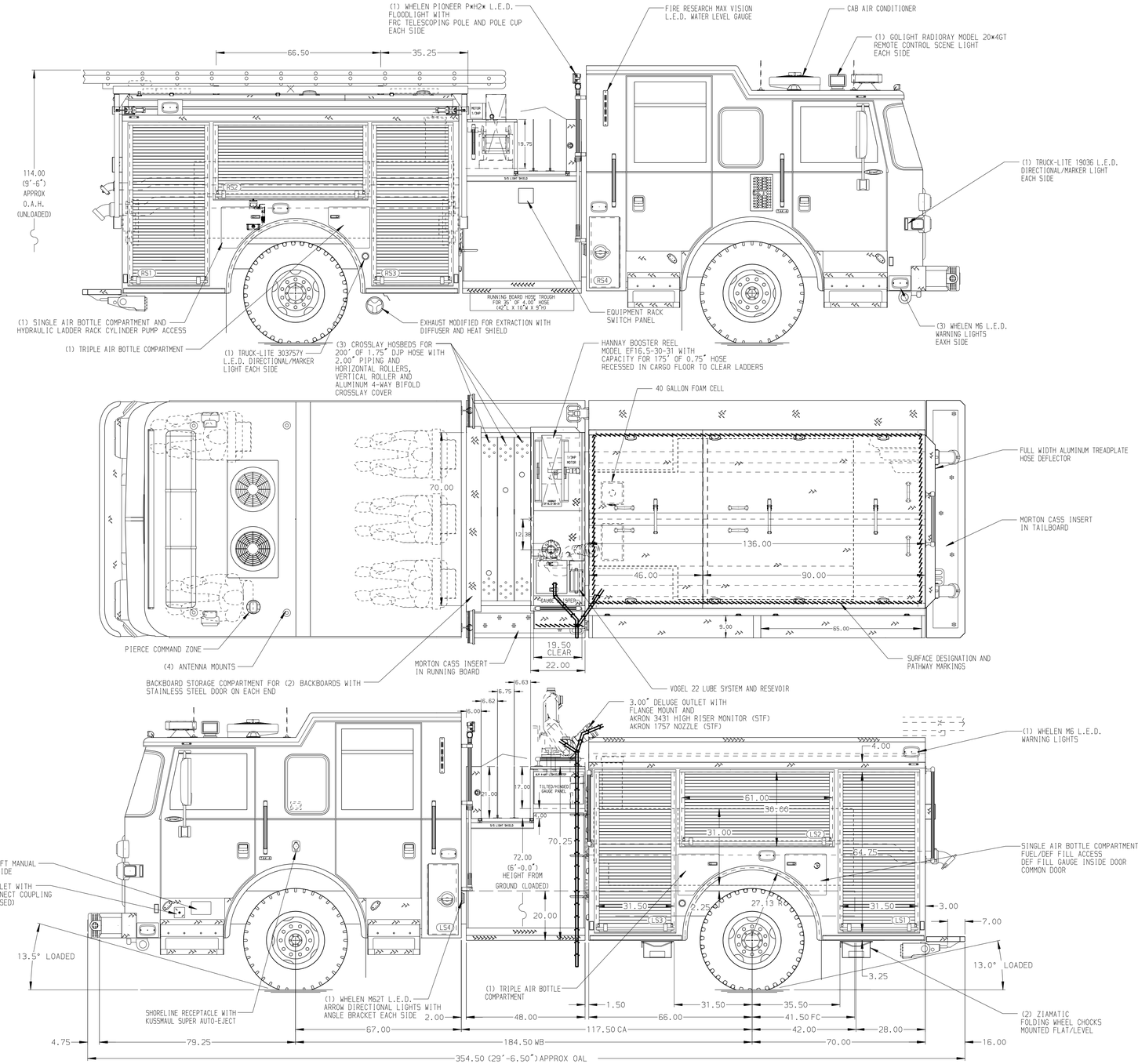

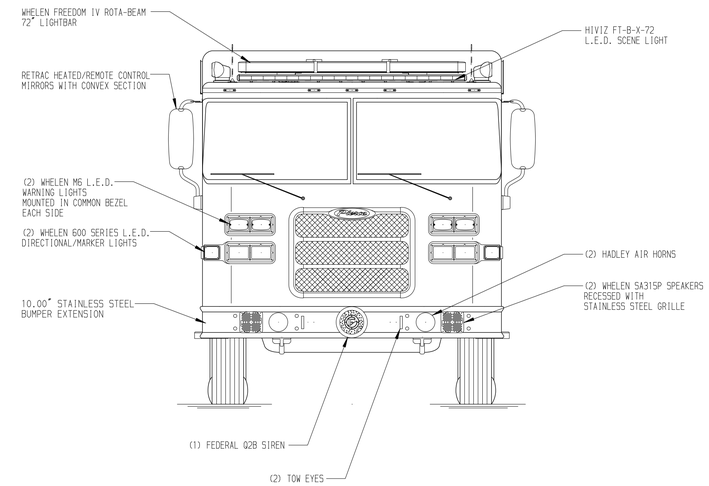

HOSEBED CAPACITIES

1. - 900' OF 4.00" DJP HOSE
2. - 750' OF 2.50" DJP HOSE
3. - 200' OF 2.50" DJP HOSE

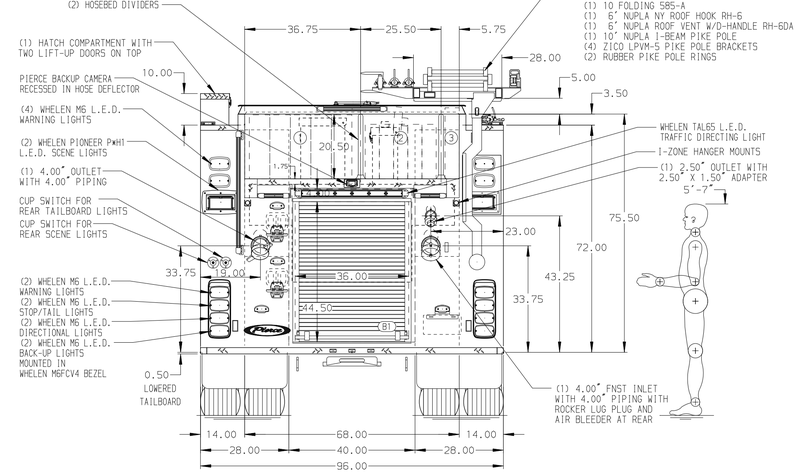

GALVANNEAL BODY

MAXIMUM O.A.L. 372.00"

MAXIMUM O.A.H. 114.00"

NOTE

DIMENSIONS SHOWN ARE APPROXIMATE AND ARE SUBJECT TO MINOR DEVIATIONS AS MAY OCCUR OR BE NECESSARY IN CONSTRUCTION.
MINOR DETAILS NOT SHOWN.

1. AIR INLET WITH DISCONNECT COUPLING RECESSED IN THE DRIVER SIDE STEPWELL
2. ONE AIR OUTLET WITH SHUT OFF VALVE LOCATED ON EACH SIDE PUMP PANEL
3. BATTERY CHARGER/COMPRESSOR LOCATED IN LS3 BODY COMPARTMENT PER ORDER
4. BATTERY CHARGE INDICATOR DISPLAY THROUGH WINDOW BEHIND DRIVER SEAT
5. PERIMETER SCENE LIGHTS LOCATED PER ORDER
6. DUAL L.E.D. LIGHT STRIPS IN HOSE BED COVER PER ORDER
7. TRUCK-LITES IN HATCH COMPARTMENT PER ORDER
8. THREE P25 CROSSLAY LIGHTS PER ORDER
9. FOAMPRO 2002 SINGLE AGENT FOAM SYSTEM
10. MIC & SPEAKER COMPARTMENT LOCATED ON DS PUMP PANEL

REV	DATE	BY	CH
5	05FEB26	SAM	SGH
4	17DEC25	SAM	SGH
3	14OCT25	SAM	SGH
2	14AUG25	SAM	BSE
1	05JUN25	SAM	SGH

CHASSIS DATA
MAKE: PIERCE
MODEL: ARROW XT

Pierce MANUFACTURING INC.

TITLE: 1500GPM, 540G TANK, 500G WATER, 40G FOAM 136" BODY, MUX
FOR: SAN DIEGO FIRE DEPARTMENT SAN DIEGO, CALIFORNIA
DWG NO. 40053AD-SH1

JOB NO.	40053 (01-06)
SCALE	1:24
DATE	
DRAWN BY	SAM 29MAY25
CHECKED BY	SGH 29MAY25
SHEET SIZE	D
SHEET NO.	1 OF 2

View File Created 05-FEB-2026 10:17:22