PUMPER

BODY
Short Aluminum 2nd Gen Pumper

CHASSIS
Enforcer Chassis

CHASSIS

AXLE, FRONT, CUSTOM
22,800 lb TAK-4 Axle

AXLE, REAR
27,000 lb Dana Axle

ENGINE
510 HP Paccar MX13 Engine

TRANSMISSION
Allison 6th Gen, 4000 EVS P

BUMPER
22" Extended Under Slung Painted Steel

CAB
7000 Enforcer Cab

BODY

TOTAL TANK CAPACITY
750 Gallon New York Style Poly Tank

WATER CAPACITY
750 Gallons of Water

FOAM CELL
Foam Cell Not Required

COMPT, PUMPER, REAR
30.75" FF Rear Compt

COMPT, PUMPER, LEFT SIDE
145" Lap Full Height Front & Rear

COMPT, PUMPER, RIGHT SIDE
145" Lap Low

FIRE SUPPRESSION

PUMPHOUSE
45" Control Zone Side Mount

PUMP
1500 GPM Waterous CSU

CROSSLAYS, 1.50"
1.50" Crosslays Not Required

CROSSLAYS, 2.50"
2.50" Crosslay Not Required

SPEEDLAYS
Speedlays Not Required

GENERATOR
Generator Not Required

FOAM SYSTEM
Foam System Not Required

SAFETY

Side Roll and Frontal Impact Protection

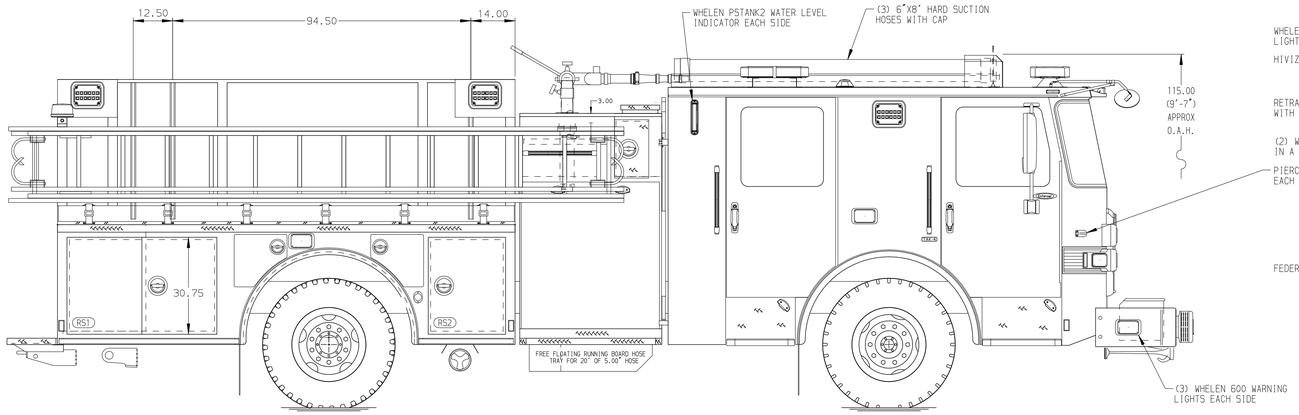

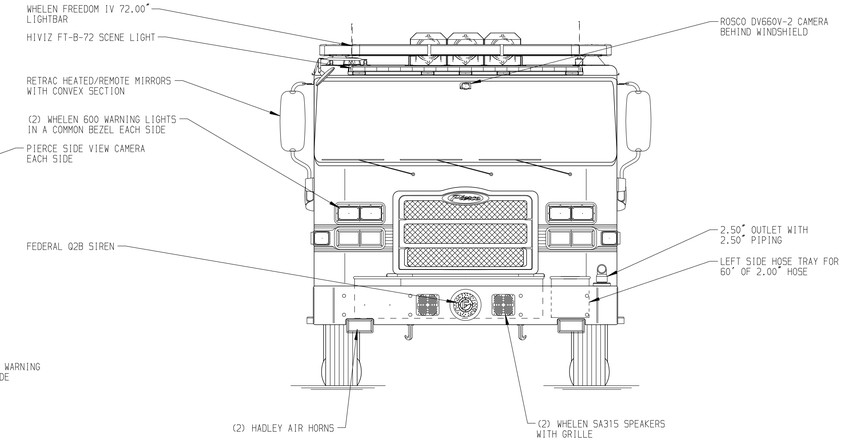

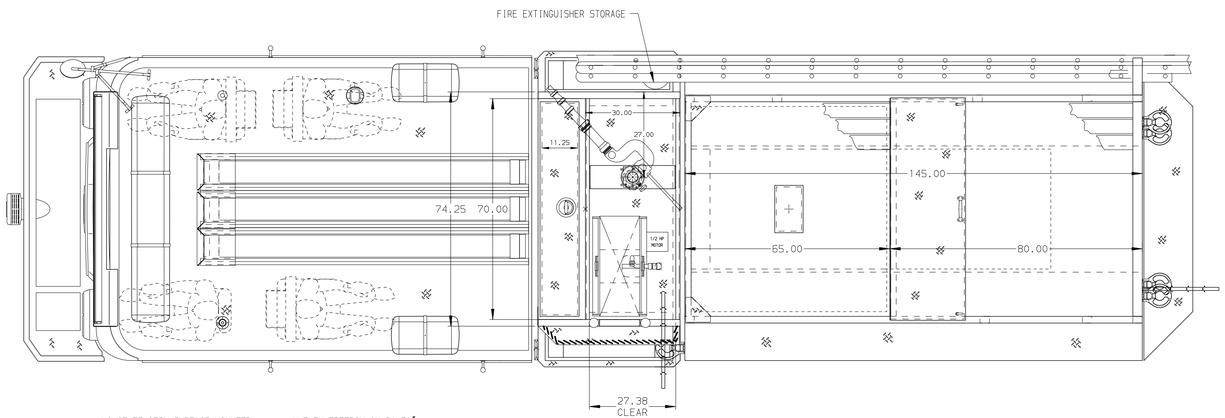

HOSEBED CAPACITY

BED 1
200' OF 1.88" D.J. POLY HOSE

BED 2
200' OF 1.88" D.J. POLY HOSE

BED 3
1000' OF 5.00" D.J. POLY HOSE

BED 4
400' OF 2.50" D.J. POLY HOSE

BED 5
400' OF 1.88" D.J. POLY HOSE

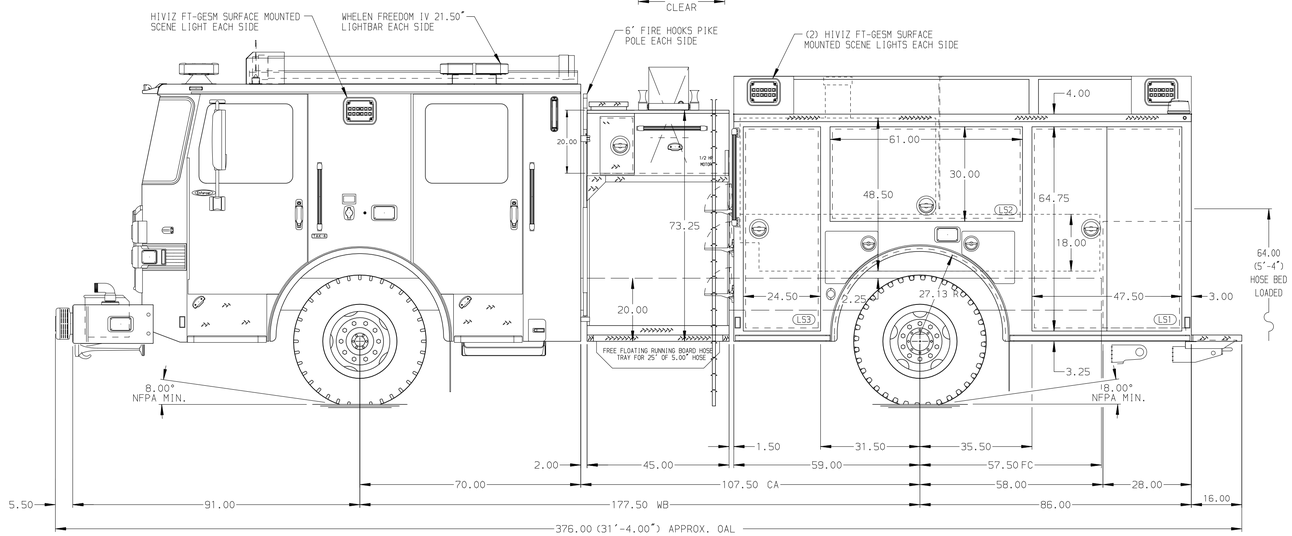

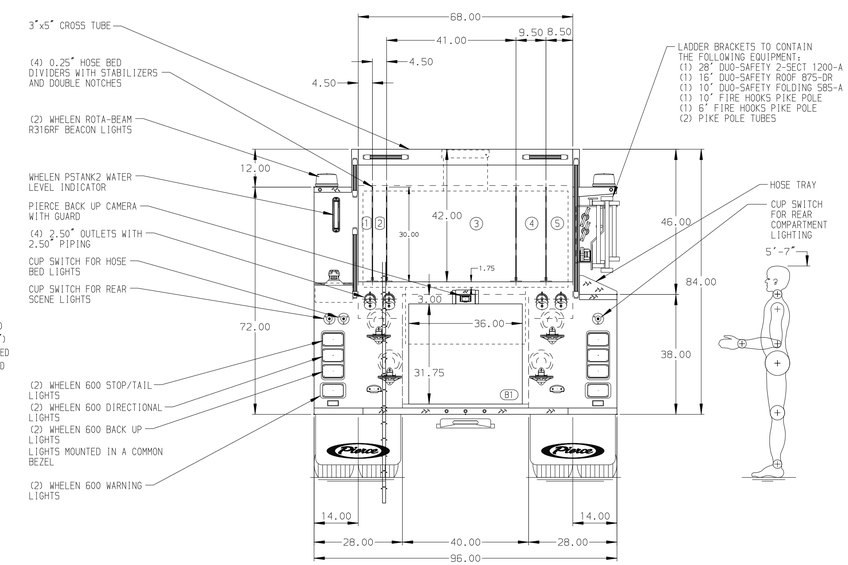

NOTE

DIMENSIONS SHOWN ARE APPROXIMATE AND ARE SUBJECT TO MINOR DEVIATIONS AS MAY OCCUR OR BE NECESSARY IN CONSTRUCTION.
MINOR DETAILS NOT SHOWN.

1. BATTERY CHARGER LOCATED IN COMPARTMENT-LS3
2. TWO FULL WIDTH/DEPTH ADJUSTABLE SHELVES WITH SIDES PER SHOP ORDER
3. ONE FLOOR MOUNTED SLIDE-OUT TRAY WITH SIDES PER SHOP ORDER
4. TWO RECEPTACLES LOCATED IN THE CAB PER SHOP ORDER
5. THREE BACK WALL MOUNTED TOOLBOARDS LOCATED PER SHOP ORDER
6. AIR INLET PER SHOP ORDER
7. KUSSMAUL AIR COMPRESSOR PER SHOP ORDER
8. SHORELINE RECEPTACLE PER SHOP ORDER
9. BATTERY CHARGER INDICATOR PER SHOP ORDER
10. WORDEN SAFETY WHEEL CHOCKS AND BRACKETS SHIPPED LOOSE
11. AIR OUTLET WITH SHUT OFF VALVE LOCATED ON PS PUMP PANEL
12. TWO RECEPTACLES LOCATED IN THE CAB PER SHOP ORDER
13. ONE RECEPTACLE LOCATED IN THE BODY PER SHOP ORDER

REV	DATE	BY	CH
D	17DEC24	BST	JGO
C	17OCT24	BST	JGO
B	09AUG24	LST	JGO
A	04AUG24	JJB	JGO

CHASSIS DATA
MAKE: PIERCE
MODEL: ENFORCER

Pierce MANUFACTURING INC.

TITLE: Pierce Pumper Approval Drawing
–
FOR: New Hope Fire Department - Belmont NC
–
DWG NO.: 40091AD

JOB NO.	40091
SCALE	1:24
DATE	
DRAWN BY	BST 15MAY24
CHECKED BY	MMF 17MAY24
SHEET SIZE	D
SHEET NO.	1 OF 1

View File Created 18-DEC-2024 08:30:48